3.3 Loads and Load Factors

Table of Contents

List of Figures

List of Tables

Appendix

Reference

3.3 Loads and Load Factors

3.3.1 Application of Loads

Loads are considered to be transmitted through the superstructure to the substructure and then to the foundation material. All loads follow the most direct path to a supporting member or the foundation support. For a beam span bridge, the dead loads are transmitted to the pier or abutment as concentrated reactions from the beams allowing for continuity. For deck slab loads being transmitted to the beams, the slab should be treated as simple span. For a concrete haunched slab bridge, the dead loads are transmitted to the abutment or pier beam as a uniform load across these members. Live loads should be placed to give the maximum design for pier caps, columns, piling or footings. Column design loads are considered coincident loads, that is, loads which can occur at the same time. It is overly conservative to design for the maximum moment occurring at the same time as the maximum axial load.

For the application of wind load, longitudinal force and thermal force to piers, the designer should consider the features of the superstructure. These loads will have the most effect on long span structures with a rocker and bolster, a pot bearing or a spherical bearing. The maximum horizontal force that can be exerted on a pier by expansion bearings is the friction force in the bearings themselves. The friction force is computed from the dead load reaction times the applicable friction coefficient. Live load reactions are not used in the computation of the friction force because the vibration due to the passage of live loads will break friction and therefore transfer the load into the pier. (See Section 3.2.12 Bearing Supports in the LFD BDM)

To determine the point of application of the loads for computation of moment for the pier, the designer should use what is considered the shear transfer point. Longitudinally, this point may be considered at the level of the rockers, in which case the load would act at the top of pier. Transverse loads can be applied at the top of pier provided the superstructure is not rigidly braced and the bearings are multi-directional. For a rigidly braced superstructure with rigidly attached rockers or bolster, the transverse loads may be considered to act at the centroid of the area. This is considered a conservative approach and should be used on most structures. If transverse wind load becomes critical, refine calculations.

If there is any question whether ice loads will be a consideration in the design of the bridge, the problem should be resolved during the bridge field check.

In steel, the stress-strain relationship is sufficiently independent of the rate and duration of loading within the usual range of rates of stress. In concrete, however, the properties change appreciably with time due in part to creep, shrinkage, rate of loading, temperature changes, size of member and properties of the aggregates and cement. Concrete will creep under load, that is, it will continue to deform over a long period of time when subjected to constant load. Creep due to sustained loads tends to reduce the flexural stiffness of a member. In concrete column design, when creep and shrinkage effects are combined with slenderness effects, the design can become complicated and service load stresses can only be estimated. The nominal resistance of a given cross section is rather indefinite. This computed theoretical resistance is reduced by the appropri-

ate strength reduction factor ϕ (**0.75 for both tied and spiral columns** *See Article 5.5.4.2*) to account for variations in material strengths and workmanship.

Even in the absence of external loading, concrete experiences deformations and volume changes due to shrinkage and the effects of temperature changes. Reinforcement for shrinkage and temperature stresses must be provided near exposed surfaces of walls and slabs not otherwise reinforced. The total area of reinforcement provided shall be at least that specified in *Article 5.10.8* in each directions. Shrinkage is a special consideration in the design of prestressed concrete.

3.3.2 Limit States

Consider all appropriate load combination and load factors in *Tables 3.4.1-1 and 3.4.1-2* to maximize the force effects. In general the following is a summary of the design limit states:

Strength- Strength and Stability

I Basic Load Combination
II Special or Permit
III Wind greater than 50 mph
IV High DL/LL ratio
V LL + Wind > 55 mph

Extreme Event - Long Return Period Events

I Earthquake
II Ice, Vessel, Vehicular collision

Service - Stresses, Deformations, Cracks

I Normal Service Load Combination
II Steel Structures
III Tension in Prestressed Concrete

Fatigue

Uses 75% of one truck as low stress and high cycle loadings.

Fatigue can be both stress induced, as mentioned above, and distortion induced. Relative movement between adjacent girder lines may cause out-of-plane stresses that exceed the initiation threshold for the detail being considered.

Fatigue loading cycle frequency according to Article 3.6.1.4.2 for finite life calculations require the calculation of the single-lane average daily truck traffic

$$ADTT_{SL} = p \times ADTT$$

Where:

$ADTT_{SL}$ = the number of trucks per day in a single-lane averaged over the design life
ADTT = the number of trucks per day in one direction averaged of the design life
p = fraction of traffic in a single lane per *Table 3.6.1.4.2*

3.3.3 Load Modifiers

For most structures, each of the load modifiers will be 1.00. For a limited number of bridges, load modifiers with values different from 1.00 need to be used. Table 3.3.3-1 summarizes KDOT's policy for load modifiers

Table 3.3.3 -1 Standard KDOT Load Modifiers

Modifier	Value	Condition
Ductility (η_D)	1.00	Steel structures, timber bridges, ductile concrete structures
	1.05	Non ductile concrete structures
Redundancy (η_R)	1.00	Redundant
	1.05	Non Redundant
Importance (η_I)	0.95	ADT < 500
	1.00	500 < AADT < 40,000
	1.05	Major river crossing, or AADT > 40,000 or Inter-State Bridge

3.3.4 Loads

3.3.4.1 Permanent Loads

The dead load consists of the structure complete, including roadways, curbs, sidewalks and railing. In addition to the structure dead loads, superimposed dead loads such as pipes, conduits, cables, stay-in-place forms and any other immovable appurtenances should be included in the design.

Consider the weight of the silica fume overlay on a two-course deck to be a 'DC' load. Future wearing surface (FWS) loads will be considered 'DW' loads. Design dead loads for future wearing surfaces are closely related to KDOT's policy for Bridge Deck Protection (see Section 3.9.2.1). For one-course decks with 2 ½ in. clear to top of reinforcing, 25 psf will be used. For two course decks and one course decks with 3 in. clear to top of reinforcing, 15 psf will be included in the design. This loading assumes that when the future overlay is in place, ¼ in. of concrete will be milled off the decks that have 2 ½ in. clear and 1 in. will be milled off the decks with 3 in. clear to top of reinforcing.

The future wearing surface load is not included in the dead load deflections.

3.3.4.2 Live Load

Use the HL-93 live load as designated in the LRFD Specifications. The HL-93 live loading consists of the design truck or design tandem, and the design lane load. For negative moment regions, use 90% of the two design trucks as specified in *Article 3.6.1.3*. Do not use the double tandem loading described in the commentary to *Article 3.6.1.3.1*.

The Kansas Overload Provisions previously used on bridges designed by the Load Factor Design (LFD) method will not be used with the HL-93 loading.

When a structure is being evaluated for load cases involving more than two lanes of traffic, a reduction factor or multiplier can be used. This factor recognizes the reduced probability that all lanes will be fully loaded at the same time. A factor of 1.2 is to be used for the design of structures carrying a single lane of traffic. Note that when using the approximate load distribution factors specified in *Articles 4.6.2.2 and 4.6.2.3*, the multiple presence factor has already been incorporated into the formulas.

Fatigue
The fatigue load consist one truck with a constant spacing of 30 ft. between the 32 kip axles. A dynamic load allowance of 15% is applied to the fatigue load. Note that neither the tandem axle pair nor the lane load is applied in this limit state. Because fatigue is the effects of one truck on the structure the distribution factor and multiple presence will reflect that fact. The distribution factor and the multiple presence factors are based on single-truck load configuration.

Deflection
Deflection is to be limited to values shown in *Article 2.5.2.6.2* using the larger effects from the loading as design criteria of:

- Design Truck alone x Distribution Factor x Dynamic Allowance x Multiple Presence
- ((25% of the Design Truck x Dynamic Allowance) +100% of the Design Lane) x Distribution Factor x Multiple Presence.

$$DF = m_n \cdot \left(\frac{N_L}{N_b}\right)$$

When investigating the maximum absolute live-load deflection, all design lanes should be loaded, and the supporting components should be assumed to deflect equally. For multi-girder bridges, this is equivalent to saying that the distribution factor for computing live-load deflection is equal to the number of lanes divided by the number of girders. Use the Service I live load portion and include the multiple presence factor from *Article 3.6.1.1.2*.

Heavy Equipment Transporter (HET)

Load Rate all new and rehabilitated bridge designs (including bridges that are made composite when redecking) for the heavy equipment transporter (HET) shown in Figure 3.3.4.2-1 Military Heavy Equipment Transport. Load rating, design and rehabilitation of all structures, for HET

loads is a change in KDOT's policy. In the past, only the areas surrounding Fort Riley were subject to the HET loadings. However, the recent trend of routing these military vehicles throughout the entire state has warranted a change in KDOT's policy.

Use the following HET application and rating guidelines:

HET: Use a minimum Operating Stress Level Rating Factor of 1.0 with full impact and modified distribution described below. This should result in the HET loading equaling 170-175% of a HS20 truck and resulting stress levels.

1) For Girder Bridges use full impact and a single lane distribution factor **(S/7.0)** at the **Operating Stress Level**.
2) Slab Bridges have a single lane distribution equal to the multi-lane distribution, use full impact and a 15% increase in the distribution (i.e. 1/E will become 1/(E*1.15)).

   • NOTE: The single lane distribution factor in girder structures and the15% increase in distribution in slabs is an approximate adjustment for the twelve-foot width trunnion axles on the trailer.

3) Fatigue and crack control criteria, which is used for normal load rating trucks, are not used for the HET vehicle or other permitted vehicles due to the smaller number of loading occurrences. See section 4.10.2 LFD Load Rating
4) <u>All new</u> bridge design plans, for projects on state routes, will include the following "LFD & LRFR Rating Factors Chart," on the "General Notes and Summary Sheet".

LFD RATING FACTORS		
Truck \ Rating Level	Inventory	Operating
HS-20 (36T)		
Type HET (110T)		
2002 LFD Rating. 17th Edition AASHTO		

LRFR RATING FACTORS		
Design Load \ Rating Level	Inventory	Operating
HL-93 Loading		
2008 Manual for Bridge Evaluation		

Figure 3.3.4.2-1 Military Heavy Equipment Transport

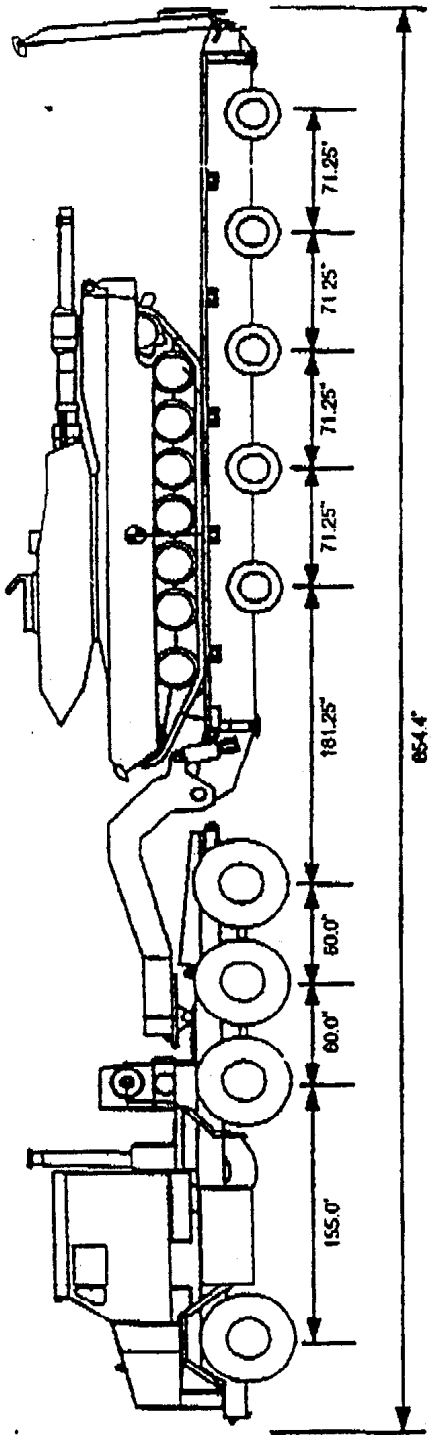

AXLE NUMBER:	1	2	3	4	5	6	7	8	9	TOTAL
TIRES PER AXLE: 2/	2	2	2	2	8	8	8	8	8	48
EMPTY LOAD: 3/ (pounds (tons))	19,450 (9.7)	10,750 (5.4)	10,175 (5.1)	10,075 (5.1)	6,450 (3.2)	6,550 (3.3)	6,250 (3.1)	10,650 (5.3)	10,450 (5.2)	90,800 (45.4)
64.5-TON LOAD: 4/ (pounds (tons))	21,477 (10.7)	21,346 (10.7)	21,183 (10.6)	19,128 (9.6)	25,385 (12.7)	27,835 (13.9)	26,291 (13.1)	27,420 (13.7)	29,754 (14.9)	219,800 (109.9)

	M1070 Truck Tractor	M1000 Semitrailer	M1A1 / M1A2 Tank
WIDTH	102"	144"	144" / 144"
HEIGHT	144.16"	43" (cargo bed) 143.14" (overall)	113.7" / 121.1 (trailer with tank: 156.7" / 164.1)

NOTES:
1/ The axle loads are approximations. The only accurate way to determine axle loads is to measure the system.
2/ M1070 Tire size - 16.00R20XZLT LRM
Cross country - 55psi
Highway - 75 psi
M1000 Tire size - 215/75R 17.5xXTA(135J)LRH - 95 psi
3/ Axle loads are based on measured data.
4/ Axle loads are based on calculated data.

M1070/M1000 HEAVY EQUIPMENT TRANSPORTER WITH M1A1/M1A2 TANK 1/

Figure 3.3.4.2-2 Map showing area of Ft. Riley military influence for Seismic Detailing

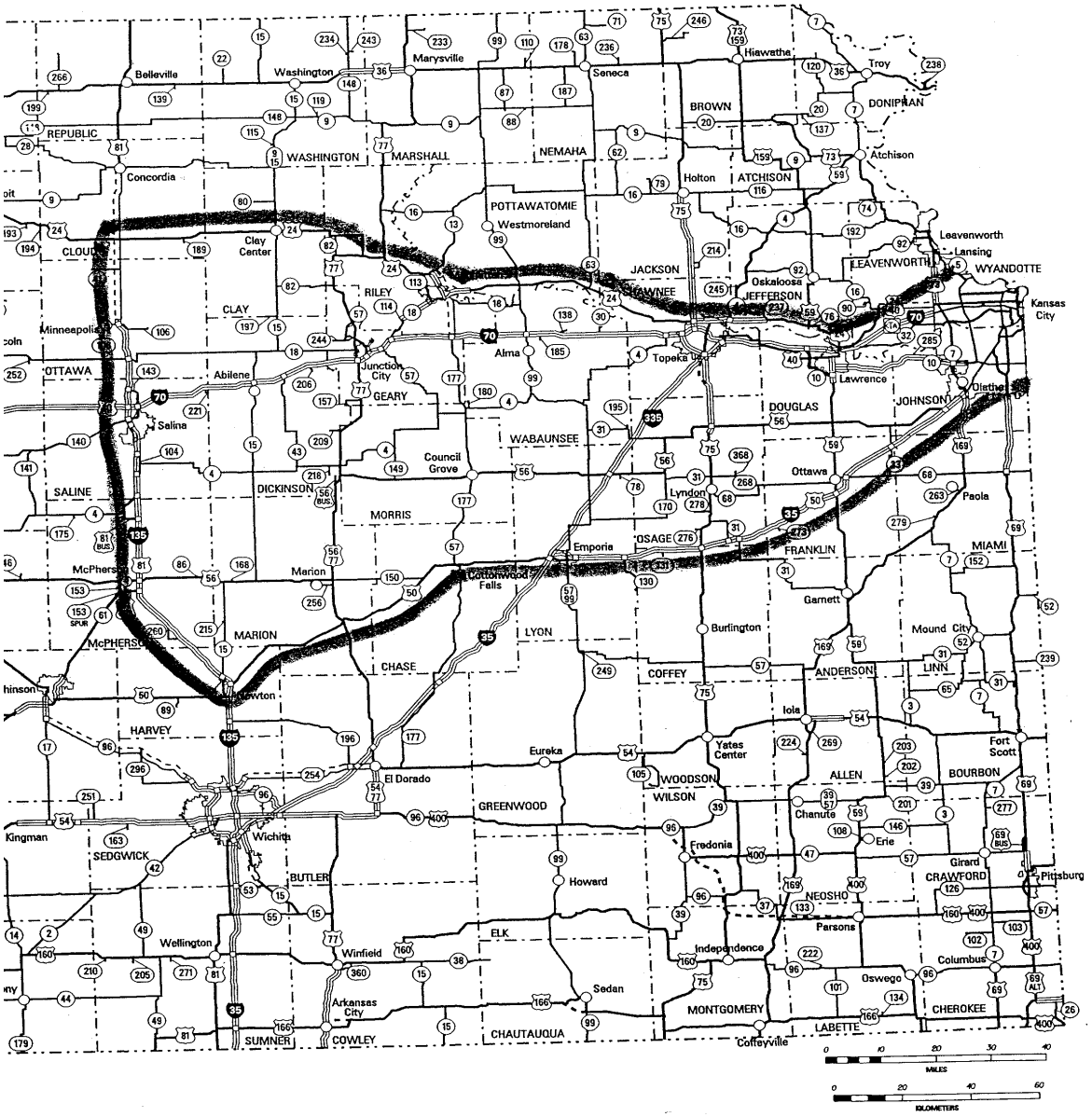

Note:
Only A, B & C route bridges within the above are considered relative to the enclosed area.

3.3.4.2.1 Rehabilitation Considerations

Bridges that are considered for rehabilitation on the State system must be capable of supporting HS20 loadings or be able to be retrofitted to sustain such loadings. A bridge that cannot be upgraded to HS20 loading may still be able to remain in place depending upon its load rated capacity, in conjunction with its functional classification as set forth in AASHTO, (2004). For all loadings HS20 or less, provision shall be made for an infrequent heavy load in accordance with *Article 3.5.1*. A loading combination must be applied in accordance with Group IA.

Where maximum stresses are produced in any member by loading with three or more traffic lanes simultaneously, the live load may be reduced by a probability factor as covered in *Article 3.12*. This would apply to members such as transverse floor beams, truss and two-girder bridges, pier caps, pier columns or any member that has been loaded with more than two traffic lanes. This does not apply to deck slab design or longitudinal beams designed for fractional wheel loads since less than three traffic lanes will produce the maximum stress.

An impact factor shall be applied to the live load in accordance with AASHTO Specifications. The live load stresses for the superstructure members resulting from the truck or lane loading on the superstructure, shall be increased by an allowance for dynamic, vibratory and impact effect. Impact should be included as part of the loads transferred from the superstructure to the substructure, but shall not be included in loads transferred to the footings nor to those parts of piles or columns that are below ground.

3.3.4.3 Dynamic Load Allowance

The dynamic load allowance (impact) is only applied to the design truck or tandem; not to the lane load or pedestrian loads. Unlike previous specifications were this value was a function of the span length; the increased force effect is a constant of 15% from facture and fatigue or 33% for all other limit states. Deck joints use a value of 75% for all limit states. Culverts and other buried structures have a lower dynamic load allowance as shown in *Article 3.6.2.2*.

3.3.4.4 Thermal Force Considerations

Thermal forces (TU) should be considered in accordance with AASHTO LRFD Specifications Method "A". Temperature range for bridges in Kansas should be that for a cold climate. For steel and aluminum structures, the range should be from -30º to 120º F and for concrete structures the range should be from 0º to 80º F. A reference temperature of 60º F should be used. Generally, thermal stresses in monolithic concrete bridges are not a problem except for long continuous bridges. For a deck integral with piers or columns, reference is made to Portland Cement Association, (1983, p. 34). This method can also be used for computation of stresses in columns due to changes in deck length. Since temperature stresses are very slow developing and the concrete member temperature is near the average daily ambient temperature, the modulus of elasticity used in the computation of stresses in the columns may be decreased from the instantaneous modulus of elasticity. A value of about one-third of the instantaneous modulus has been used in the past and is suggested here for LRFD Substructure Design. The load factors for *TU* in *Table 3.4.1-1* for Strength load combinations are **0.50/1.20**; KDOT policy recommends that for concrete column design use **0.33/1.20** as load factors for *TU*.

3.3.4.5 Braking Force

This load is substantially greater than previous editions of the standard specifications due to improved braking capability of modern trucks.

The force will be the greater of:

- 25% of the axle weights of the design truck or design tandem or
- 5% of the design truck + lane or 5% of the design tandem + lane

Apply the braking force to traffic headed in the same direction. All lanes shall be loaded for bridges likely to become one directional in the future. Apply the multiple presence factor; however, the dynamic load allowance factor is not applied to braking forces. Braking forces are assumed to act at a height of 6 ft. above the roadway surface and in a longitudinal direction. With elastomeric bearings, the force should be applied at the bearing.

3.3.4.6 Centrifugal Forces

Similar to braking forces, multiple presence factors should be used and the dynamic load allowance should not be used.

3.3.4.7 Vehicle Collision

3.3.4.7.1 Protection of Structures

All unprotected structural elements that are inside the clear zone and may be struck by a vehicle or train need to be designed to resist an equivalent static force of 600 kips located 5 ft. above the ground. Barriers used to protect piers need to meet the TL-5 crash testing requirements. See Section 3.4.2.5 "Loads on Piers" for additional pier design guidance.

KDOT'S POLICY ON THE LRFD *ARTICLE 3.6.5* "VEHICLE COLLISION FORCE"

For a bridge over a **roadway**, the interpretation of *Article 3.6.5* shall be as follows (in order of preference):

1) If feasible, locate the face of the pier outside of the clear zone. Under these conditions, the collision force on the pier will not be required even if the clear zone is less than 30'-0".

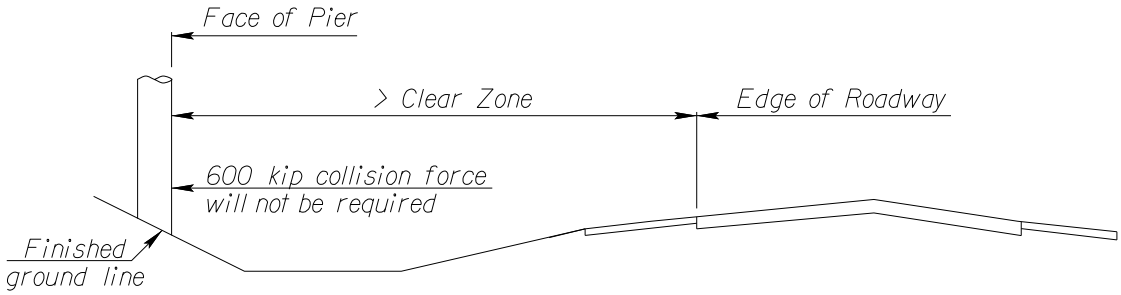

2) If it is required that the face of the pier be located inside the clear zone, the design of the pier must include the 600 kip collision force.

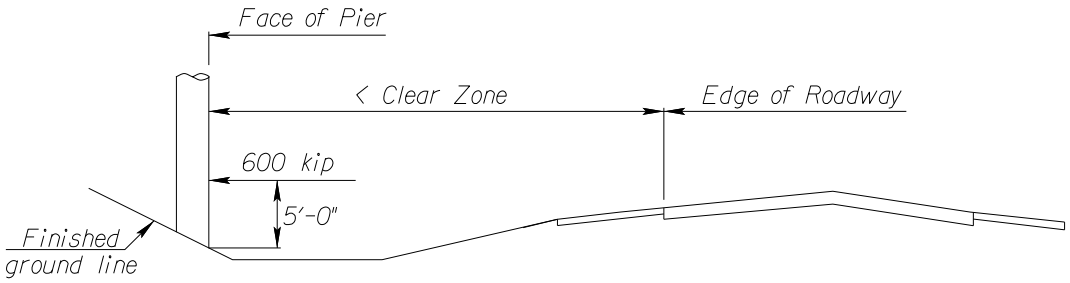

3) If the pier is located inside of the clear zone, use one of the following barriers to protect the pier:

a) If the barrier is located greater than 10'-0" from the face of the pier, use a 42" (TL5) Barrier Rail.

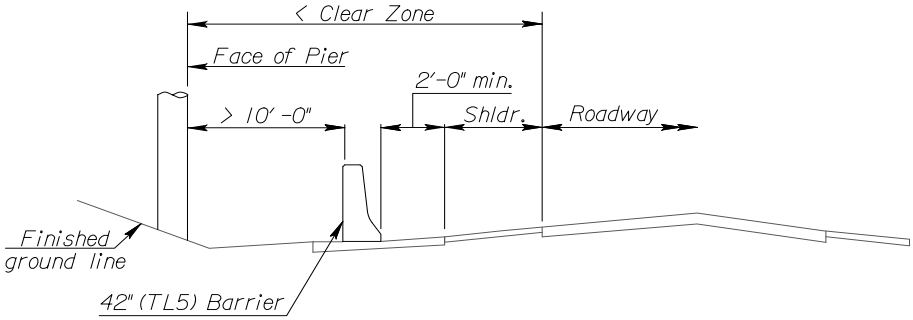

b) If the barrier is located 10'-0" or less from the face of the pier, use 54" high (TL5) Barrier Rail.

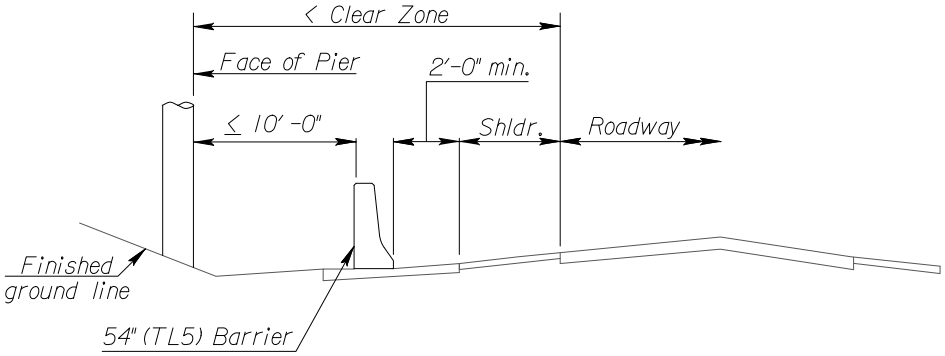

For a bridge over a **railroad**, KDOT will retain design criteria, but allow exemptions consistent with Table C.3.6.5.1-1; use the road over as determination of route traffic count and railroad as curved or tangent determination. The above criteria is related to the existing railroad conditions.

1) If the face of a pier is located greater than 50'-0" from the centerline of the tracks, the collision force on the pier will not be required.

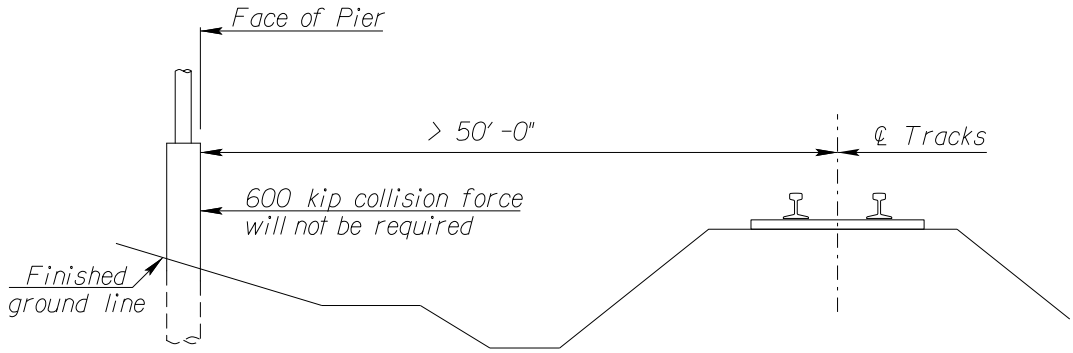

2) If the face of a pier is located less than 50'-0" and greater than 25'-0" from the centerline of the tracks, the design of the pier must include the 600 kip collision force.

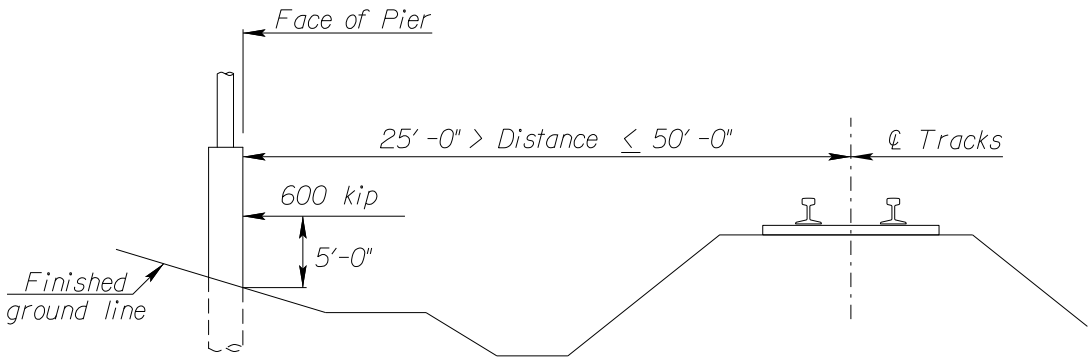

3) If the face of a pier is located less than or equal to 25'-0" (H) from the centerline of the tracks, the design of the pier must include a crash wall in addition to the 600 kip collision force. See Figure 3.3.4.7-1 for design and geometry requirements of the crash wall.

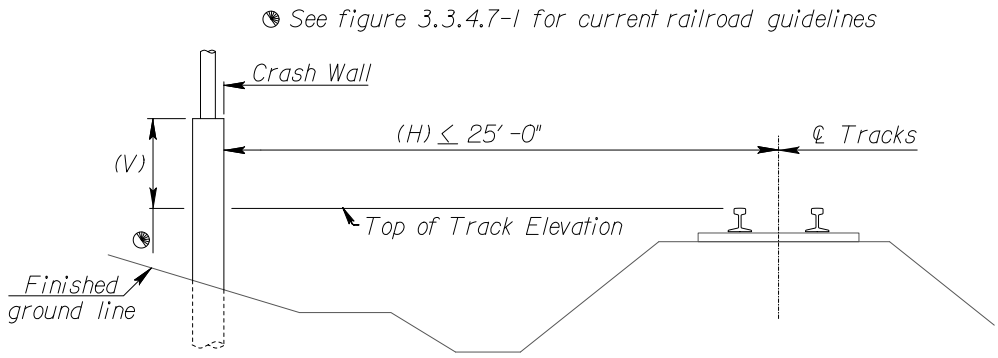

Figure 3.3.4.7-1 Railroad Grade Separation Crash Wall Details

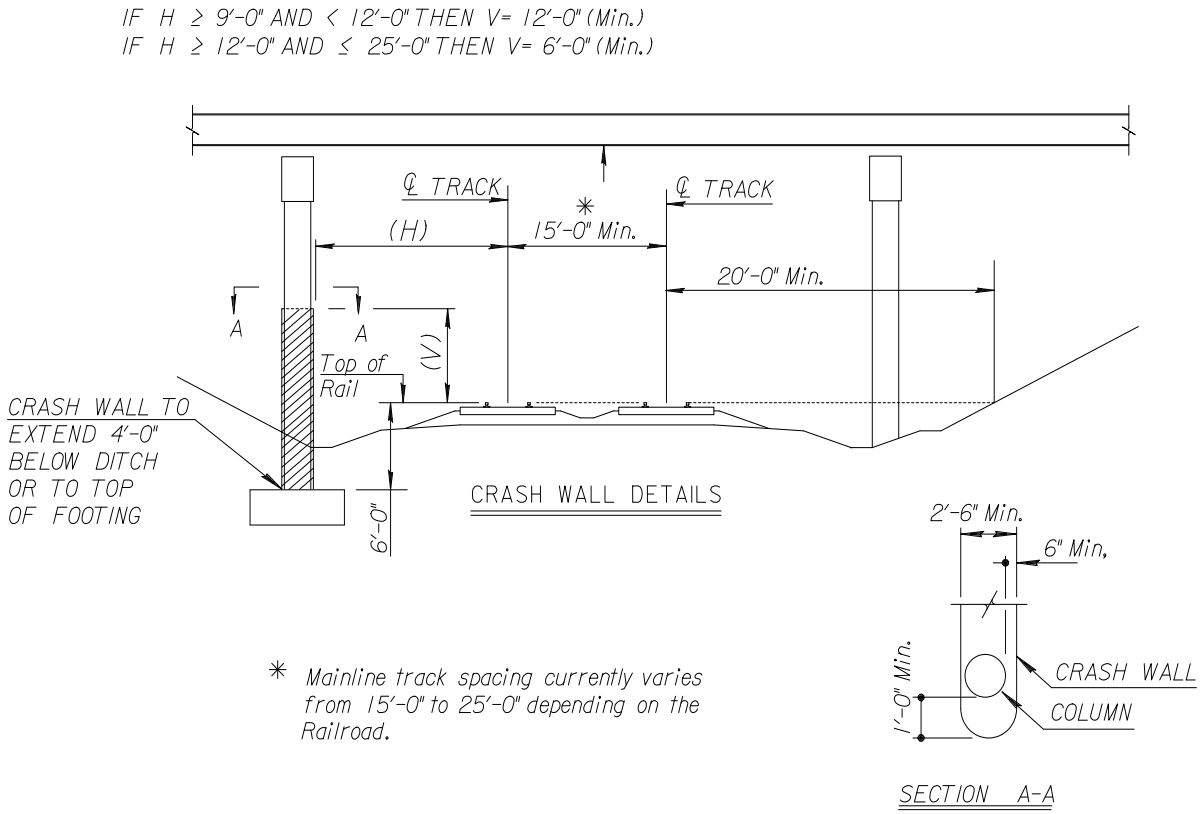

3.3.4.7.2 Vehicle Collision with Barriers

Railings on bridge decks are required to be crash tested per NCHRP Report 350. On the Kansas State Highway System, the minimum test level for bridge rails will be a TL-4. This includes all elements within the clear zone, such as noise walls. See *Section 3.9* "Decks and Deck Structures" for analysis and design of deck slab overhang. See *LFD Section 3.2.10* "Curbs, Railings and Sidewalks" for additional guidance on barriers and rails.

3.3.4.8 Seismic Loads

In general Kansas is in Seismic Zone 1, LRFD Specification *Article 4.7.4.1* states that bridges in Seismic Zone 1 need not be analyzed for seismic loads, regardless of their importance and geometry. However, minimum superstructure to substructure connections indicated in *Article 3.10.9.2* and minimum bearing support lengths *Article 4.7.4.4* are required. When determining the tributary horizontal design connection forces if:

$$A_s = PGA \times F_{pga}$$

PGA = Peak Ground Acceleration *Figure 3.10.2.1-1*
F_{pga} = Site Class Definitions (from KDOT Geotech) *Table 3.10.3.1-1*

- A_s is less than 0.05 then use 0.15 times the vertical reaction due to dead load with $\gamma_{EQ} = 0$
- A_s is greater than 0.05 then use 0.25 times the dead load plus $\gamma_{EQ} = 0.25$
- *A_s is greater than 0.05 then use 0.25 times the dead load plus $\gamma_{EQ} = 0.50$

* See Figure 3.3.4.2-2 Map showing area of Ft. Riley military influence for Seismic Detailing for Fort Riley military influence area.

These horizontal forces are transferred through the connector into the substructure. The substructure elements are then designed and reinforced to resist these applied static loads. The forces transferred to the substructure elements have response modification factors as shown below.

Structures within the Ft. Riley influence are either "Critical" or "Essential", structures outside this region are defined as "Other". There maybe exceptions, a structure maybe upgraded from "Essential" to "Critical" if an exceeding long detour, if no other crossings are within that reach of the river system or as directed by the State Bridge Office. A structure is "Critical" if the location is at a multilevel interchange where collapse would compromise other important routes below.

Table 3.10.7.1-1 Response Modification Factors—Substructures.

Substructure	Importance Category		
	Critical	Essential	Other
Wall-type piers—larger dimension	1.5	1.5	2.0
Reinforced concrete pile bents			
• Vertical piles only	1.5	2.0	3.0
• With batter piles	1.5	1.5	2.0
Single columns	1.5	2.0	3.0
Steel or composite steel and concrete pile bents			
• Vertical pile only	1.5	3.5	5.0
• With batter piles	1.5	2.0	3.0
Multiple column bents	1.5	3.5	5.0

Table 3.10.7.1-2 Response Modification Factors—Connections.

Connection	All Importance Categories
Superstructure to abutment	0.8
Expansion joints within a span of the superstructure	0.8
Columns, piers, or pile bents to cap beam or superstructure	1.0
Columns or piers to foundations	1.0

The response modification factors for the transfer of loads to the connection from the superstructure are shown above, these factors are self-explanatory.

Article 3.10.9.5 does not allow friction to be used to resist the longitudinal forces.

Use Site definitions in *Table 3.10.3.1-1* with Acceleration Coefficients in *Figure 3.10.2.1-3* to determine A_S.

For retrofit design, See the FHWA Report (1987), this can assist designers in evaluating existing bridges for seismic resistance.

Figure 3.3.4.8-1 FLOW CHART FOR SEISMIC LOADS

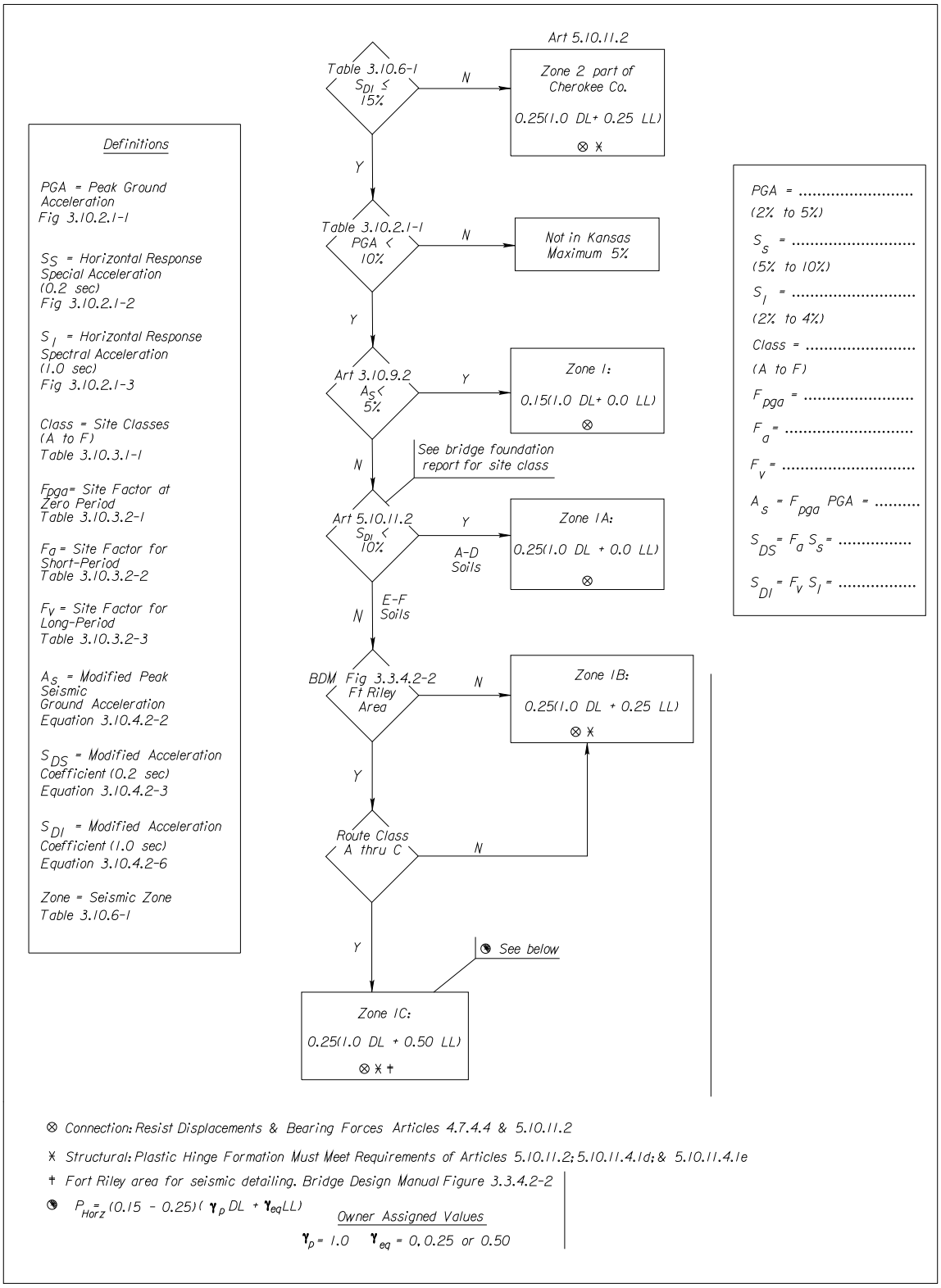

3.3.4.9 Wind Load on Structures

The force effects of the wind loads on structure should be considered for the Strength III & V and the Service I & IV load combinations. The design wind speed is 100 mph. For structures over 30 ft., *Article 3.8.1.1* provides a method to estimate the wind speed based on height and near-surface environmental conditions. For most structures, the total height will be less than 30 ft. and base wind pressures can be used for design. For small and/or low structures, wind loading does not usually govern the design. Wind load need not be considered for monolithic slab bridges. The vertical overturning wind load described in *Article 3.8.2* should be considered in design, especially on bridges with single column piers.

Loads on the substructure can be applied to elevation or transverse views, or resolved into transverse and longitudinal components for skewed bridges.

3.3.4.10 Wind Load on Live Load

The force effects of wind on live load should be considered for the Strength V and the Service I load combinations. The force components (parallel and normal) for different wind skew angles are presented in *Table 3.8.1.3-1*. The wind on live load forces are applied at a height of 6 ft. above the top of the deck.

3.3.4.11 Ice Loads

In the absence of more precise data, use a design ice load that is 1.0 ft. thick with a crushing strength of 16 ksf. Assume the ice load is applied midway between the ordinary high water elevations and the elevation at Q_{100}. Ice loads should also be applied to piers located in large reservoirs. The ice load in this case should be applied at the conservation pool level.

In general, ice loads are not a problem in Kansas except at some locations on the Kansas or Missouri Rivers where ice jams may occur. The need to include ice pressure in the design of a structure should be made at the field check.

3.3.4.12 Water Loads

Piers located in streams that are susceptible to transporting large amounts of drift and debris shall be designed to withstand the corresponding increase in stream pressure due to drift accumulation on the pier. Use the debris raft as shown in the *Article C3.7.3.1*.

Scour is not a load by itself, however, because it changes the supporting conditions and ultimately the force effects, substructure force effects must consider fully scoured conditions per *Article 2.6.4.4.2*.

- Check scour depths from the effects of a 100-year flood or from the overtop at a lesser event at the strength and service limit states.
- Check scour depths for the effects of a 500-year flood for stability. The bridge is only expected to survive this at the extreme limit state.

Blockage of the flow area by drift build-up can increase the stream velocity and thus increase the scour depths through the bridge opening. The changing conditions of the channel due to scour

need to be considered in the design of the substructure. The bridge should be fully functional while in a scoured condition under the strength and service limit states when subjected to a 100 year flood or less. Check the 100-year flood, the overtopping flood (if less than the 100-year flood) and other events if there is evidence that such events would create deeper scour than the 100-year or overtopping floods.

Stream forces shall be applied to a depth based on the scour evaluation. When checking the lateral resistance of the piling or drilled shafts, no lateral support from the soil above the estimated scour line shall be assumed.

See Section "2.3.9.3 Scour Analysis" for further discussion on scour.

3.3.5 Construction Loads

When evaluating construction loads use *Article 3.4.2* with 'DC' and 'DW' equal to 1.30. When evaluating the falsework or temporary support use 1.50 for the dynamic effects in Strength I. These factors account for the lack of certainty of the weight for the construction equipment.

3.3.6 Transportation Loads

Check prestressed beams for transportation forces using 3.0 for 'DC' in the portion of the beam which overhangs the support and 1.0 for 'DC' elsewhere. See "Section 3.2.9.12 Transportation" or Section 3.5.2 for details.

References

AASHTO, (2004). A Policy on Geometric Design of Highway and Streets, 5th Edition.

FHWA Report, (1987). Seismic Design and Retrofit Manual for Highway Bridges, Report Number FHWA-1P-87-6.

Portland Cement Association, (1983). Continuous Concrete Bridges, Second Edition, p.34.

Appendix A

Example Calculation for Single-Lane ADTT for LRFD Fatigue Loading

(Article 3.6.1.4.2) March 21, 2011

Definitions:

$ADTT_{SL}$ is the single-lane average daily truck traffic in one direction.
This is for the traffic lane in which the majority of the truck traffic crosses the bridge. On a typical bridge with no nearby entrance/exit ramps, the shoulder lane carries most of the truck traffic. The frequency of the fatigue load for a single lane is assumed to apply to all lanes since future traffic patterns on the bridge are uncertain.

D If only bidirectional ADTT is available, one direction truck traffic may be estimated as 55 percent of the biderectional truck traffic.

rate If the design ADTT is not given for a 75 yr design life, the data my be estimated by extrapolating the current growth rate given.

p fraction of traffice in a single lane (See *Table 3.6.1.4.2-1*).

AADT average annual daily traffic. (Limit of 20,000 vehicles per day per lane)

Inputs:

$AADT_{current} := 3450$ $Year_{current} := 2011$ $p := 0.85$

$AADT_{design} := 4325$ $Year_{design} := 2031$ $Bidirectional := \text{"no"}$

$D := 55\%$

Heavy truck % ..... $T_{heavy} := 24.9\%$ Medium truck % ..... $T_{med} := 5.1\%$

Calculations:

$$rate := \frac{AADT_{design} - AADT_{current}}{Year_{design} - Year_{current}}$$ $rate = 43.75$ vehicles/year growth rate

$$AADT_{Projected} := \min(20000, AADT_{current} + rate \cdot 75)$$ $AADT_{Projected} = 6731$

$$AADT_{75} := \frac{AADT_{current} + AADT_{Projected}}{2}$$ $AADT_{75} = 5091$

$$ADTT_{SL} := \begin{cases} p \cdot AADT_{75} \cdot D \cdot (T_{med} + T_{heavy}) & \text{if } Bidirectional = \text{"yes"} \\ p \cdot AADT_{75} \cdot (T_{med} + T_{heavy}) & \text{otherwise} \end{cases}$$

Results:

$ADTT_{SL} = 1298$