STANDARD SPECIFICATIONS

FOR STATE ROAD AND BRIDGE CONSTRUCTION

METRIC VERSION

★

★

Kansas Department
of
Transportation

Edition 1990

DIVISION 700

STRUCTURES

SECTION 701

CONCRETE STRUCTURE CONSTRUCTION

701.01 DESCRIPTION.

This work shall consist of furnishing and placing Portland cement concrete for structures and incidental construction in accordance with these specifications and as shown on the Plans or established by the Engineer.

BID ITEMS

Class _____ Concrete (*).
Class _____ Concrete (Misc.) (*).
Class _____ Early Strength Concrete (*).
Reinforced Concrete Box (**).
Class-A Concrete (AE) (Lightweight Aggregate) (Modified).

* "AE" denotes air-entrained concrete.
No entry denotes without air-entrainment.
** Denotes size.

701.02 MATERIALS.

The materials, handling of cement and aggregates, the classification, composition, consistency, proportioning, batching, mixing, and transportation of concrete shall conform to the requirements of Division 400 and the Materials Division.

Materials for expansion, contraction or construction joints in concrete structures shall conform to the requirements provided in the Materials Division.

Joint Sealing Compound	Section 1500
Preformed Expansion Joint Filler Type B	Section 1500
Preformed Elastomeric Compression Joint Seal	Section 1500
Asphalt for Poured Joints	Section 1200
Bridge Number Plate	Section 1600
Concrete Curing Materials	Section 1400

701.03 CONSTRUCTION REQUIREMENTS.

(a) Concrete or Air-Entrained Concrete for Structures.

The slump of the concrete shall be that required for satisfactory placement in the respective parts of the structure. The maximum slump allowable for bridge decks or subdecks shall be 75 millimeters, therefore if the designated slump is greater than 55 millimeters the plus tolerance will be limited by the maximum allowable slump. (see also Section 402)

(b) Falsework.

The Contractor shall be responsible for designing and constructing safe and adequate falsework which will provide the necessary rigidity, support the loads imposed, and produce in the final structure the lines and grades indicated on the Plans.

Falsework piling shall be driven to a satisfactory depth and bearing value to support all falsework that cannot be founded on rock, shale, or thick deposits of other compact material in their natural beds. The use of mudsills on earth, sand, gravel, and similar materials will not be permitted. Falsework shall not be supported on any part of the structure except the footings without the written permission of the Engineer. The number and spacing of falsework piling, the adequacy of sills, caps, and stringers, and the amount of bracing in the falsework framing shall be subject to approval of the Engineer.

Falsework piling shall be of sound material that will withstand driving, be reasonably straight, and of sufficient size to provide adequate strength to safely carry the actual loads imposed. All timber shall be of sound wood, in good condition and free from defects that might impair its strength. If the falsework piling or vertical members are of insufficient length to cap at the desired elevation for the horizontal members, they shall preferably be capped and frames constructed to the proper elevation. Ends of the piling or vertical members shall be cut square for full bearing to preclude the use of wedges. If vertical splices are necessary, the abutting members shall be of the same approximate size, the ends shall be cut square for full bearing and shall be adequately spliced.

Unless the Plans provide for permanent camber, the falsework shall be constructed to provide only sufficient camber to insure against final settlement below the finish lines shown on the Plans. Adequate hardwood wedges or screw jacks shall be used in all falsework construction and shall be so placed that they can be adjusted to give proper form alignment. The Contractor shall, if required, provide means for adjusting forms to offset any excessive settlement. If screw jacks are used, they will be adequately braced and secured in such a manner that will prevent tipping of the jacks in any direction.

The Contractor shall provide means for accurately measuring settlement in falsework during placement of concrete, and shall provide a competent observer to observe and correct the settlement.

Seven copies of detailed Plans (maximum size 560 mm × 915 mm) for falsework shall be submitted to the Engineer for review

and approval by the railroad company (where applicable) and the Engineer on the following structures:

1. All structures over or under railroad tracks.
2. All structures built over highways or streets carrying traffic.
3. All structures carrying highway traffic during construction.
4. All structures which require falsework plans as noted on the construction Plans.
5. Unless otherwise required falsework plans will not be submitted for structural steel construction.

Falsework details for structures over or under railroad tracks and structures built over highways or streets carrying traffic shall bear the seal of a licensed Professional Engineer.

The drawings shall show the type, size, grade, and finish of all lumber used, and provide adequate details of the Contractor's proposed method of construction to permit checking by the Engineer. Additional information may be requested by the Engineer.

In designing forms and centering, concrete shall be regarded as a liquid. In computing vertical loads, a force of 23.5 kilonewton per cubic meter shall be assumed, and not less than 13.5 kilonewton per cubic meter shall be assumed in computing horizontal pressure.

The Engineer may refuse permission to proceed with other phases of the work if he deems the falsework unsafe or inadequate to properly support the loads to which it will be subjected.

The review or approval of falsework plans by the Engineer or permission to proceed with the work shall not relieve the Contractor of his responsibility for successful erection and satisfactory results.

(c) Forms.

All approved metal or wood forms shall be mortar tight and sufficiently rigid to prevent distortion due to the pressure of the concrete and other loads incidental to the construction operations including placement and vibration of the concrete. Separation at the joints will not be allowed. They shall be designed to permit easy removal without injury to the concrete. Form lining such as plywood or metal forms shall be used for all exterior exposed surfaces which will be visible after backfilling, except for the inside surface of the walls and slab of box culverts and bridges, the inside arch ring of arch culverts

and bridges, the underneath surface of all floor slabs and the interior vertical surfaces of girders. The forms shall extend to low water level, or 300 millimeters below the bottom of the channel or the top of the completed backfill as the case may be. Forms shall be used in the largest practical panels to minimize joints. Small panels shall not be permitted. When wooden panels are used, adjacent panels shall be so placed that the grain of the wood will be in the same general direction (all horizontal or all vertical). Undressed lumber of uniform thickness may be used for backing for form lining. Dressed, sized lumber of uniform thickness may be used for all other exposed surfaces. Wooden plyform, of adequate thickness, which is properly supported to meet the above requirements may be used alone in lieu of the lined forms specified herein.

Forms shall be maintained to eliminate warping and shrinkage. They shall be checked for dimensions and condition immediately prior to the placement of concrete. The Engineer may at any time require the revision or reconstruction of forms to insure satisfactory work and may refuse permission to place concrete within the forms until they are satisfactorily constructed. If, at any period of the work during or after placing the concrete, the forms show signs of sagging or bulging, the concrete shall be removed to the extent directed by the Engineer, the forms brought to the proper position and new concrete placed. No compensation will be made to the Contractor for such extra work.

The specifications for forms, in relation to design, mortar tightness, filleted corners, beveled projections, bracing, alignment, removal, reuse and oiling apply to both wooden and metal forms. Metal forms shall be of such thickness that the forms shall remain true to shape. All bolt and rivet heads shall be countersunk. Clamps, pins or other connecting devices shall be designed to hold the forms rigidly together and to allow removal without injury to the concrete. Forms which do not present a smooth surface or do not line up properly shall not be used. Care shall be exercised to keep metal forms free from rust, grease or other foreign matter. Steel panels or panels with metal frames and wood or combination facing which leave permanent impressions or ridges and aluminum forms will not be approved.

Steel traveling forms may be used on reinforced concrete box structures or other applicable items when approved by the Engineer. Continuance of the use of such forms will depend upon satisfactory performance and the discontinuance may be re-

quired at any time the Engineer determines their use to be unsatisfactory.

When traveling forms are used, supports shall be provided as follows prior to loosening and moving the forms.

MAXIMUM SPACING PERMITTED FOR SUPPORTS

Spans up to 2.75 meters..... 1 support located @ center of Span.
Spans 2.75 to 4.25 meters..... 2 supports located @ 1/3 points of Span.
Spans 4.25 to 5.5 meters..... 3 supports located @ 1/4 points of Span.

The maximum longitudinal spacing of the supports shall be at 1.2 meter centers.

The time the supports must be left in place are specified in subsection 701.03 (d).

In the case of multi-barrel structures, transverse beams used to provide support shall be supported at each vertical wall.

The forms shall not be loosened and moved until the concrete has been placed a minimum of 14 hours. The concrete exposed as a result of moving the forms prior to the stipulated curing time shall immediately be coated with curing membrane applied in accordance with subsection 701.03 (h).

The inside of all forms for exposed surfaces, except those lined with certain composition materials, shall be oiled with a light, clear, paraffin base oil that will not discolor or otherwise injure the surface of the concrete. The oiling shall be performed prior to placement of reinforcement.

Shrinkage cracks in lumber shall be closed by moistening the forms with water prior to concrete placement.

Forms that are to be reused shall be thoroughly cleaned and reoiled and if necessary shall be reconditioned by revision or reconstruction. Unsatisfactory form material shall be removed from the site.

The width and thickness of the lumber, the size and spacing of studs and wales shall be determined with regard to the nature of the work and shall be sufficient to insure rigidity of the forms and to prevent distortion due to the pressure of the concrete.

Form bolts, rods, or ties shall be made of steel. They shall be the type which permits the major part of the tie to remain permanently in the structure. They shall be held in place by devices attached to the wales capable of developing the strength of the ties. The Engineer may permit the use of wire ties on irregular sections and incidental construction if the concrete pressures are nominal and the form alignment is maintained by other means. The ties shall be removed on all ex-

posed surfaces. The ties shall be removed to a depth of at least ten millimeters below the concrete surface. Wire ties shall be cut back at least five millimeters below the concrete surface. The cavities on exposed surfaces shall be filled with cement mortar and the surface left sound, smooth, even and uniform in color. Cavities on unexposed surfaces may be filled with tar or roofing cement. Form ties will not be permitted through forms for handrail. Pipe spreaders shall not be used unless they can be removed as the concrete is placed. Wood or metal spreaders shall be removed as the concrete is placed. The use of cofferdam braces or struts that extend through the forms for any concrete section will not be permitted except in unusual situations and then only with approval of the Engineer.

Where the bottom of the forms is inaccessible, the lower form boards shall be left loose or other provisions made so that extraneous material may be removed from the forms immediately before placing the concrete.

Unless provided otherwise on the Plans all exposed edges shall be beveled by using dressed, triangular molding, having 20 millimeter sides.

(d) Removal of Forms and Falsework.

To facilitate finishing, forms on handrails, ornamental work, and other vertical surfaces that require a rubbed finish, shall be removed as soon as the concrete has hardened sufficiently that it will not be injured. The forms on other vertical surfaces such as walls and columns shall be removed upon approval by the Engineer. In determining the time for the removal of forms, consideration shall be given to the location and character of the structure, weather and other conditions influencing the setting of the concrete.

Formed surfaces will be considered completely cured upon the Engineer's permission to remove the forms, providing the forms have been in place for a minimum of four days. This requirement is not applicable to the formed sides of bridge wearing surfaces or bridge curbs.

Forms and falsework under slabs, beams, girders, arches, and brackets shall not be removed until permission is obtained from the Engineer. Under usual conditions this permission will be granted as follows: The Engineer may approve the making and breaking of flexural test specimens on the project and if such approval is given, the forms and falsework may be removed on the day following the day that the concrete has attained its design strength as determined from beam tests made

by the Engineer. Design flexural strength shall be 2.5 megapascals for Class A Concrete and three megapascals for Class AAA Concrete as determined by third point loading tests. If beam tests are not made, the forms and falsework for all structures may be removed from under spans of less than three meters in four days, from under spans of three to six meters inclusive in seven days and from spans greater than six meters in ten days. The determination of the time requirement for the removal of forms shall commence after all the concrete for the placement is in place and finished. During cold weather the above time limits may be increased at the discretion of the Engineer depending upon the amount of protection and curing afforded the concrete. If high early strength concrete is used, the time limits may be decreased as determined by the Engineer and in accordance with agreement made prior to the placement of the concrete. Special notes on the Plans relative to the removal of forms and falsework under arches, continuous spans and other special structures shall have precedence over the above time limits for removal of forms and falsework. Falsework piling shall be pulled or cut off 300 millimeters below low water level, the natural ground, or the bottom of a channel change. On grade separation structures, the falsework piling shall be pulled or cut off 300 millimeters below subgrade elevation of the roadbed that the piling are driven into and all other falsework piling shall be pulled or cut off 300 millimeters below finished grade.

(e) Handling and Placing Concrete.

All foundation piling shall be driven in any one pier or abutment before concrete is poured in any column of that pier or abutment. Concrete shall not be placed until forms and reinforcing steel have been checked and approved. The forms shall be clean of all debris before concrete is placed. The method and sequence of placing concrete shall be approved.

When concrete is placed on bridge decks in hot weather and the ambient air temperature is expected to reach 32° C or higher, the Contractor shall schedule his operations to place and finish the concrete during the hours that the ambient air temperature will be below 32° C.

Concrete shall be placed so as to avoid segregation of the materials and the displacement of the reinforcement. Concrete shall not be deposited in large quantities at any point in the forms and then run or worked along the forms, thus causing segregation of the materials.

The concrete shall be deposited in the forms in horizontal layers and the work shall be carried on rapidly and continuously between predetermined planes agreed upon by the Contractor and the Engineer.

Where the chutes for placement of concrete are on steep slopes, they shall be equipped with baffle boards or be in short lengths that reverse the direction of movement.

Chutes, troughs and pipes shall not be made of aluminum.

All chutes, troughs and pipes shall be kept clean and free from coatings of hardened concrete by thoroughly flushing with water after each run. The water used for flushing shall be discharged clear of the concrete already in place.

Concrete shall not be dropped in the forms a distance of more than 1.5 meters, unless confined by closed chutes or pipes; and care shall be taken to fill each part of the form by depositing the concrete as near to the final position as possible. The coarse aggregate shall be worked back from the forms and worked around the reinforcement without displacing the bars. After initial set of the concrete, the forms shall not be disturbed and no strain shall be placed on the ends of projecting reinforcement.

When placement of concrete is by pumping, the concrete in the pipeline shall be ejected in such manner that there will be no contamination or separation of the concrete. Aluminum pipe will not be permitted. Concrete for slump and air test requirements shall be obtained at the discharge end of the piping.

Consolidation of the concrete on all span bridges that require finishing machines, shall be accomplished by means of a mechanical device on which internal (spud or tube type) concrete vibrators of the same type and size are mounted. (see subsection 151.09 (c))

The Contractor shall provide stand by vibrator(s) for emergency use to avoid delays in case of failure.

The mechanical device shall be operated in such a manner that vibrator insertions are made on a maximum spacing of 300 millimeter centers over the entire deck surface unless otherwise designated by the Engineer. The vibrators shall not be permitted to be dragged horizontally through the concrete.

The minimum vibration time per insertion shall be five seconds and the maximum time shall not exceed 15 seconds unless otherwise designated by the Engineer. The time of the periods of vibration shall be uniform. Positive control (such as a timed light, buzzer, automatic control or other approved method) shall be required. The vibrators shall be extracted

from the concrete at a rate which is sufficiently slow to avoid leaving any large voids or holes in the concrete.

The use of hand held vibrators meeting the requirements of subsection 151.09 (c) will be required in inaccessible and confined areas such as along hubguards, etc. When required, vibrating shall be supplemented by hand spading with suitable tools to assure proper and adequate compaction. Any voids left by workers after initial consolidation shall be reconsolidated by hand held vibrators as required by the Engineer.

Concrete shall be deposited in water only with the permission of the Engineer and under his supervision. The minimum cement factor of the class of concrete being deposited in water shall be increased ten percent without further compensation and the slump shall be approximately 150 millimeters. When depositing in water is allowed, the concrete shall be carefully placed in the space in which it is to remain in a compact mass, by means of a tremie, bottom-dumping bucket, or other approved method that does not permit the concrete to fall without adequate protection. The concrete shall not be disturbed after being deposited. No concrete shall be placed in running water, and forms which are not reasonably water-tight, shall not be used for holding concrete deposited under water.

Pumping water will not be permitted from the inside of the foundation forms while concrete is being placed unless authorized by the Engineer. If necessary to prevent flooding, a seal of concrete shall be placed through a closed chute or tremie and allowed to set.

The operation of placing the concrete in any floor slab shall be continuous until complete, except where joints are provided on the Plans or authorized by the Engineer. When a special sequence or method of concrete placing operations is indicated on the Plans or designated by the Engineer, this sequence or method shall be followed.

The method used for transporting concrete batches, materials, or equipment over previously placed single pour (non-overlaid) floor slabs or floor units or over units of structures of continuous design types shall be subject to approval by the Engineer. The following delay in time schedule should be followed before permitting bridge deck finishing equipment to operate on previously poured concrete: All types of concrete spans that are fully supported with falsework, 72 hours; steel girder spans with concrete decks, 96 hours. The time delay shall start after the day's pour has been completed. In general, under normal curing conditions, legal loads may be permitted

to cross the completed structure after a minimum of 14 days, or as determined by the Engineer, from the placing of the final pour of the bridge deck, provided that approaches are in such condition so as to minimize impact. Heavy stationary loads shall not be permitted on the bridge at any time prior to completion of the 14-day period.

(f) Construction and Expansion Joints.

Whenever the work of placing concrete is delayed until the concrete has taken its initial set, the point of stopping shall be deemed a construction joint. So far as possible the location of construction joints shall be as shown on the Plans, but if not shown on the Plans, they shall be approved in advance and the placing of concrete carried continuously from joint to joint.

Where dowels, reinforcing bars or other adequate ties are not required by the Plans, keys shall be made by embedding water-soaked beveled timbers of a size shown on the details, or as directed by the Engineer, in soft concrete, which shall be removed when the concrete has set. In resuming work the surface of the concrete previously placed shall be thoroughly cleaned of dirt, scum, laitance or other soft material with stiff wire brushes, and if deemed necessary by the Engineer, shall be roughened with a steel tool. The surface then shall be thoroughly washed with clean water and painted with a thick coat of neat cement mortar, after which the concreting may proceed.

The exposed end of the end spans of all bridges which form a part of the road surface shall be finished with an edger having a five millimeter radius. Immediately after the forms are removed, a header board having dimensions of not less than 65 millimeter by 190 millimeters shall be bolted securely to the end of the deck in a manner to protect the edge of the wearing surface from damage. The header board shall extend the full width of the wearing surface, but may be in sections of one section for each lane of traffic. At the time of placing the concrete, three (M12 by 200 millimeters) bolts shall be embedded in the end of the span for each traffic lane in a manner that will hold the header board securely. The header board shall be shaped to conform to the crown of the bridge surface and shall be installed flush with the concrete. The furnishing and installing of the header board shall be considered subsidiary work pertaining to the other items of the Contract and will not be paid for directly.

(g) Finishing.

All top surfaces, such as the top of retaining walls, curbs, abutments, rails, etc., shall be treated by tamping and floating

with a wooden float in such a manner as to flush the mortar to the surface and provide a uniform surface, free from pits or porous places. The surface thus obtained shall be troweled to produce a smooth surface and brushed lightly with a damp brush to remove the glazed surface.

The bridge deck shall be struck off with an approved deck finisher. The finisher may be self-propelled or it may be propelled by manually operated winches. The screed shall be self-oscillating and it may operate or finish from a position transverse or longitudinal to the bridge roadway centerline. Prior to commencing concreting operations the Contractor shall position the finisher throughout the proposed placement area, as directed by the Engineer, so as to permit verification of the reinforcing steel positioning. Irregular sections may be finished by other methods approved by the Engineer. The wearing surface shall be floated and straightedged until the finished surface is in reasonably close conformity with the cross section shown on the Plans. As an exception to the above, underfill reinforced concrete box bridges may be struck off by other approved methods.

In general, addition of water to the surface of concrete to assist in finishing operations will not be permitted. If application of water to the surface is permitted by the Engineer, it shall be applied as a fog spray by means of approved equipment.

Decks that are to receive an overlay shall be straightedged and left with an acceptable float or machine pan finish. Decks that do not receive an overlay shall be finished in the following manner unless noted otherwise on the Plans.

When a tight, uniform surface has been achieved, the surface shall be given a suitable texture by transverse grooving with a finned float or a vibratory finned float having a single row of fins. The grooving shall be approximately five millimeters in width at 20 millimeter centers and the groove depth should be approximately three millimeters. This operation shall be performed at such time and in such manner that the desired texture will be achieved while minimizing displacement of the larger aggregate particles. For bridges with drains the transverse grooving should terminate approximately 600 millimeters in from the gutter line at the base of the curb. This area adjacent to the curbs shall be given a light broom finish longitudinally. Suitable work bridges, no part of which come in contact with the wearing surface, shall be provided.

All concrete surfaces shall be reasonably true and even, free from stone pockets, excessive depressions or projections be-

yond the surface. The concrete in bridge seats and walls shall be brought flush with the finished top surface and struck off with a straightedge and floated. The concrete surfaces which are not in an acceptable condition or which are designated on the Plans to be surface finished, shall be rubbed to a smooth and uniform texture with a carborundum brick and clean water as soon as the forms are removed and the concrete is ready to hone. The loose material formed on the surface, due to the rubbing with a carborundum brick, shall be removed as soon as it dries by means of rubbing the surface with burlap or by other approved methods. The finished surface shall be free from all loose material. A neat cement wash shall not be used.

Unless otherwise provided on the Plans, all reasonably true and even surfaces, obtained by use of a form lining, which are of a uniform color, free from stone pockets, honeycomb, excessive depressions or projections beyond the surface shall be considered as acceptable surfaces and a rubbed surface finish will not be required, except as follows:

Handrails and handrail posts, the deck side, and the top and the end of all curbs except curbs of structures having the top of curb below the final shoulder elevation of the road, shall be given an acceptable troweled or floated finish. The forms should be pulled as early as possible and the float finish given while the concrete is still green. Grout may be used where necessary during the float finish operation to fill in air and water voids and supplement the float finish. A grout coating shall not be used after the concrete has cured. A rubbed finish will not be required unless the troweled or floated finish is not a smooth and uniform acceptable finish.

The above provisions for surface finish shall not preclude requiring the use of a dry carborundum brick for straightening moulding lines, removing fins, etc., or requiring a rubbed surface finish on all portions of the structure which do not present an acceptable surface even though a form lining is used.

(h) Curing and Protection.

(1) General. All newly placed concrete shall be cured beginning immediately after finishing, and curing shall continue for at least seven days unless shown otherwise.

Curing shall be accomplished and maintained so that moisture is always present at the concrete surface and shall be an integral part of the concreting operations.

Concrete surfaces shall be covered with wet burlap, moisture proofed burlap, liquid membrane-forming compound, white

polyethylene sheeting or other approved impermeable material immediately after the finishing of the concrete has been complete and at such time that marring of the concrete will not occur. Burlap cure shall be placed and weighted down in such a manner that it will remain in intimate contact with the surface covered. If an impermeable material is used for the cure, each unit shall be lapped 500 millimeters with the adjacent unit. The impermeable material shall be placed and weighted down in such a manner that it will remain in intimate contact with the surface covered. If any curing material becomes perforated or torn, it shall be immediately repaired or discarded and replaced with acceptable material. The Contractor shall furnish a work bridge for application of curing materials.

No traffic of any kind will be permitted on the curing membrane until the seven day curing period is accomplished unless the Engineer permits the placement of concrete in adjacent sections, in which case damaged areas shall be immediately repaired as directed. If rain falls on the newly coated concrete before the film has dried sufficiently to resist damage, or if the film is damaged in any other manner, a new coat of the membrane shall be applied to the affected portion equal in curing value to the original application.

Spraying equipment shall be capable of supplying a constant and uniform pressure to provide uniform and adequate distribution of the curing membrane at the rates required. The curing membrane shall be continuously agitated during application.

(2) Bridge Decks. Initial curing of bridge decks shall consist of an application of liquid membrane-forming compound. Curing membrane shall be applied to the bridge deck concrete while it is wet but no free moisture remains on the surface and it shall be applied in two coats. The rate of application of curing membrane will be as prescribed by the Engineer with a minimum spread rate per coat of one liter per five square meters of bridge deck. The first coat shall be applied immediately after finishing operations are complete. If the concrete becomes dry, it shall be thoroughly wet with water applied as a fog spray by means of approved equipment and the first coat of curing membrane applied just as the surface film of water disappears. The second coat shall be sprayed immediately and at right angles to the first coat. Application of liquid membrane-forming compound on surfaces of construction joints and reinforcing steel is prohibited. Following the second coat of curing membrane the bridge deck shall be covered with wet

burlap, moisture proofed burlap, white polyethylene sheeting or other impermeable material. This curing media shall not be applied until the concrete has hardened sufficiently to preclude marring of the concrete and shall be placed on the same day of the concrete placement.

For bridge deck wearing surfaces the initial cure shall be a clear or translucent, with fugitive dye liquid membrane meeting the requirements for Type 1-D in Section 1400. For subdecks which will receive an overlay or wearing surface, the initial cure shall be white pigmented liquid membrane-forming curing compound meeting the requirements for Type 2 in Section 1400.

(3) Surfaces Requiring Rubbed Finish. Curbs, walls, handrails and other surfaces requiring a rubbed finish shall be kept moist before and during the rubbing, and a coating of liquid membrane meeting the requirements for Type 1-D in Section 1400 shall be applied immediately after the surface is completed and while the concrete is still moist at the rate specified in subsection 701.03 (h)(5).

(4) Formed surfaces will be considered completely cured upon the Engineer's permission to remove the forms, providing the forms have been in place for a minimum of four days. This four day minimum does not apply when cold weather curing is required. This requirement is not applicable to the formed side of bridge wearing surfaces or bridge curbs.

When forms are removed before the four day cure period, the surface shall be cured by an application of curing membrane meeting the requirements for Type 1-D in Section 1400 at the rate specified in subsection 701.03 (h)(5).

(5) The curing media for ditch lining, wash checks, riprap, flume inlets, slope drains, and curb and gutter shall be Type 2 curing membrane applied immediately after finishing of the concrete and before the set of the concrete has taken place. The curing shall be maintained for a period of seven days.

Curing membrane shall be applied to the concrete while it is wet but when no free water remains on the surface, and it shall be applied in two coats. The rate of curing membrane will be as prescribed by the Engineer with a minimum spreading rate per coat of one liter per six square meters of concrete surface. The first coat shall be applied immediately after completion and acceptance of the concrete finish. If the concrete is dry or becomes dry, it shall be thoroughly wet with water applied as a fog spray by means of approved equipment and the first coat of curing membrane applied just as the surface

film of water disappears. The second coat shall be sprayed immediately after and at right angles to the first application.

The curing membrane shall be protected against marring for a period of at least seven days after placement of the concrete. Any coating marred or otherwise disturbed shall be given an additional coating. Should the curing membrane be subjected to continuous injury, the Engineer may require wet burlap, polyethylene sheeting or other approved impermeable material to be applied at once.

(6) Curing time for sidewalks and steps shall be four days. Type 2 curing membrane may be used on sidewalks and steps provided there is no construction or pedestrian traffic on the membrane during the four day curing period. Curing membrane shall be applied at the rate specified in subsection 701.03 (h)(5).

(7) Cold Weather Curing. When concrete is being placed in cold weather, it shall be placed in accordance with the requirements provided in Division 400.

When concrete is being placed and the ambient air temperature may be expected to drop below 5° C during the curing period, the Contractor shall provide suitable measures such as straw, additional burlap, or other suitable blanketing materials and/or housing and artificial heat to maintain the concrete temperature between 5° C and 32° C as measured on the surface of the concrete. The surface of the concrete shall be kept moist by the use of an approved moisture barrier such as wet burlap or polyethylene sheeting. The moisture barrier shall be maintained in intimate contact with the concrete during the entire seven day curing period. After the completion of the required seven day curing period, the Contractor shall remove the curing and protection in such a manner that rapid cooling of the concrete will be prevented.

When concrete is placed in cofferdams and subsequently flooded with ground water, the above curing conditions may be waived providing the surface of the water is not permitted to freeze.

The temperature of concrete for ditch lining, wash checks, flume inlets, slope drains, sidewalks, steps and riprap need only to be maintained above 0° C for a period of 96 hours, and an approved moisture barrier shall be used for the remaining cure period as specified in subsection 701.03 (h)(5). If properly executed this procedure will fulfill the necessary requirements for cold weather curing.

(i) Bridge Number Marking.

Bridge numbers shall be placed on bridges when designated on the Plans. The numbering shall be accomplished by the use of plates recessed in the concrete during construction and will be so indicated on the Plans. The plates shall be of the materials and dimensions as indicated and shall be placed at the locations shown on the Plans. The date placed on the plates shall be the year in which the structure is completed. No additional compensation will be allowed for plates but they shall be considered as subsidiary work pertaining to other items in the Contract.

(j) Concrete Seal Course.

Concrete seal courses shall be placed as provided in Section 207.

701.04 METHOD OF MEASUREMENT.

This item shall be measured by the cubic meter complete in place of the several classes of concrete involved. Measurement shall be on the neat lines of the structure as shown on the Plans. No deductions shall be made from the cubic meters of concrete so measured for reinforcing steel and pile heads extending into the concrete. Concrete placed as a seal course shall be measured as provided in Section 207.

When the Plans and Contract contain the bid item "Reinforced Concrete Box" under alternate drainage structures; the reinforced concrete box shall be measured by the meter horizontally along the centerline of the box between the inside faces of the hubguard. No measurement will be made of the concrete, reinforcing steel or aprons and wire mesh if required, but shall be considered subsidiary to the item "Reinforced Concrete Box".

701.05 BASIS OF PAYMENT.

The amount of completed and accepted work measured as provided above, shall be paid for at the Contract unit price per cubic meter for the several classes of "Concrete", "Concrete (AE)", "Concrete (Misc.)", "Concrete (Misc.) (AE)", "Early Strength Concrete", or "Early Strength Concrete (AE)" and "Class A Concrete (AE) (Lightweight Aggregate) (Modified)", which prices shall be full compensation for furnishing, quarrying, preparing, transporting, delivering, mixing and placing all materials, including forms, falsework and joint filler (except reinforcing

steel, structural steel, cast iron and expansion plates), for all labor, equipment, tools and incidentals necessary to complete the work.

When the Plans and Contract contain the item "Reinforced Concrete Box" under alternate drainage structures; the amount of completed and accepted work shall be measured as provided above and shall be paid for at the Contract unit price per meter for "Reinforced Concrete Box" which price shall be full compensation for furnishing, quarrying, preparing, transporting, delivering, mixing and placing all materials, including forms, falsework, concrete, reinforcing steel, wire mesh, joint fillers and for all labor, excavation, equipment, tools and incidentals necessary to complete the work.

SECTION 702

STRUCTURAL STEEL CONSTRUCTION

702.01 DESCRIPTION.

This work shall consist of the furnishing and erecting and/or placing of all structural steel and castings used in structures, fabricated and constructed in accordance with the Specifications and as shown on the Plans or established by the Engineer.

BID ITEMS
Structural Steel (Grade as shown on Plans).
Cast Steel.
Cast Iron.
Bearing Devices.
Bridge Painting (*).
Headed Stud Anchors.

(*) Type as shown on the Plans or Contract.

702.02 MATERIALS.

All materials shall conform to the requirements specified in the Materials Division.

Structural Steel for Bridges	Section 1600
Paint and Paint Materials	Section 1800
Steel Castings	Section 1600
Iron Castings	Section 1600
Headed Stud Anchors	Section 1600

702.03 PRELIMINARY SHOP REQUIREMENTS.

(a) Point of Fabrication.

Not more than ten days after the Contract is signed, the Contractor shall notify the State Bridge Engineer and the Chief, Bureau of Materials and Research in writing as to the name and location of the firm that will fabricate the structure. All structural steel shall be produced and fabricated within the Continental United States. Frabricators of bridge beams and overhead sign structures shall be certified by the American Institute of Steel Construction in the appropriate category for the type of work being performed.

(b) Shop Drawings.

The Contractor or fabricator shall submit to the Engineer prints of shop drawings of both structural steel and castings. These prints shall be submitted in duplicate for initial review and seven copies (maximum size 560 mm × 915 mm) shall be submitted for final approval and distribution unless more copies are requested. **These shop drawings shall be approved by the Engineer before any fabrication is begun under the Contract.**

Changes on approved shop drawings or Contract Plans shall be subject to the approval of the Engineer and he shall be supplied with a record of such changes. Revised sheets shall be the same size as the shop drawings originally submitted. These dimensions shall include but not be restricted to bearing-to-bearing lengths and vertical and horizontal curvature offsets and bearing points and splices.

Structures with horizontal and/or vertical curvature shall have a diagram on the shop detail Plans for each span giving sufficient dimensions for accurate fabrication and inspection of the structure.

The Contractor shall be responsible for the correctness of his shop drawings, and for shop fits and field connections, even though the shop drawings have been approved by the Engineer.

No work shall be performed in the shop before the Engineer has authorized fabrication. Unless otherwise authorized in writing, fabrication will not be authorized until the approved shop drawings are in the hands of the inspector and fabricator. Any purchase of materials prior to fabrication authorization shall be at the Contractor's risk.

(c) Notice of Beginning of Work.

The Contractor shall give the Engineer ample notice of the beginning of work in the shop, so that inspection may be provided, and also of the beginning of the work at the mill if mill inspection is to be provided. Advance notice shall be given as follows: Shops/Mills in the State of Kansas (24 hours); Shops/Mills in the contiguous United States (7 days). Unless otherwise indicated, it shall be assumed that the mill test reports will be accepted in lieu of mill inspection when they are accompanied by a written guarantee from the fabricator that all materials used are from the heats to which the supplied mill test reports pertain. Two copies of each mill test report for the steel in each heat number shall be submitted to the inspector prior to the

lay-out and use of such steel in the fabrication of the structure. A fabricator's guarantee shall be presented at the time indicating: which heat numbers were used, size of pieces used, number of pieces used for each size of each heat, the steel manufacturers name, and the fabricators purchase order number. The project number and bridge or station number shall also be shown.

When any ASTM or AASHTO grade of steel is specified on the Plans, the mill shall certify that the material does conform to the specified chemical and physical requirements. The term "mill" means any rolling mill or foundry where material for the work is to be manufactured.

(d) Facilities for Inspection and Testing.

The Contractor shall furnish facilities for the inspection of material and workmanship in the mill and shop, and the inspectors shall be allowed free access to the necessary parts of the work.

All pieces of all grades of steel used in fabrication of main members which shall include: webs, flanges, bearing stiffeners, bearing devices, splice plates, and any cross member carrying stringers and their connection plates; shall bear the heat number assigned by the rolling mill. The heat number shall be preserved until the Engineer advises the fabricator that the unit is acceptable for cleaning and painting. To identify the grade, the fabricator shall use the color identification system specified in ASTM A6M, except that A709 Grade 250 grade steel shall be identified by white markings.

(e) Test Specimens.

When directed by the Engineer, the Contractor shall prepare test coupons of the base metal and welded joint samples of sufficient size to provide "all-weld-metal" tension specimens and specimens for other weld tests. This work will be subsidiary to the fabrication of the structure and no direct payment will be made to the Contractor for this item.

702.04 HANDLING.

The loading, transportation, unloading, and storing of structural steel shall be conducted so that the metal will be kept clean, above ground, and free from injury by using protective devices or softeners to safeguard plate edges.

Structural steel, either plain or fabricated, shall be stored above the ground on platforms, skids, or other supports. It shall

be kept free from dirt, grease and other foreign matter, and shall be protected from corrosion. Girders and beams shall be stored upright with sufficient support to prevent change in design camber or warping.

702.05 SHOP FABRICATION.

(a) Straightening Material.

All mill material before being laid out for work must be straight. If straightening is necessary, it shall be done by methods that will not injure the metal. Sharp kinks and bends shall be cause for rejection of the material.

(b) Welding and Gas Cutting.

Welding and gas cutting of structural steel shall be in accordance with the applicable requirements of the "Bridge Welding Code," ANSI/AASHTO/AWS D 1.5-88, with exceptions and/or additions contained in Special Provisions included in the Contract.

(c) Finish.

All work shall be finished neatly. Shearing and clipping shall be done carefully and accurately. Finished members shall be true to line and detailed dimension. They shall be free from twists, bends, and open joints or other defects.

(d) Pins and Rollers.

Pins and rollers shall be accurately turned to the dimensions shown on the Plans and shall be straight, smooth, and free from flaws. The final surface shall be produced by a finishing cut.

Pins and rollers of more than 175 mm metric conversion sheet millimeters in diameter shall be forged and annealed, unless otherwise indicated on the Plans.

For pins larger than 225 mm metric conversion sheet millimeters in diameter, a hole not less than 50 millimeters in diameter shall be bored full length along the axis, after the forging has been allowed to cool to a temperature below the critical range, under suitable conditions and before being annealed.

(e) Boring Pin Holes.

Pin holes shall be bored true to the specified diameter, smooth and straight, at right angles with the axis of the member and parallel with each other unless otherwise required. The final surface shall be produced by a finishing cut.

The distance outside-to-outside of holes in tension members and inside-to-inside of holes in compression members shall not vary from the specified more than one millimeter. Boring of holes in built-up members shall be done after final assembly.

(f) Pin Clearances.

The diameter of the pin hole shall not exceed that of the pin by more than 500 micrometers for pins 125 millimeters or less in diameter, or one millimeter for larger pins.

(g) Threads.

Threads of bolts shall be closely matched to the nut threads and shall be ASNI, Metric Course Thread Series, except that for pin ends of diameters greater than 100 millimeters, they shall be made with six millimeter pitch.

(h) Pilot and Driving Nuts.

Two pilot nuts and two driving nuts for each size of pin shall be furnished, unless otherwise specified.

(i) Fit of Stiffeners.

Bearing stiffeners intended as supports for concentrated loads shall be milled, ground, or machine cut to secure full bearing against the flange. Intermediate stiffeners shall have a tight fit with a uniform distance between the flange plates and the ends of the stiffeners unless shown otherwise.

(j) Facing of Bearing Surfaces.

The top and bottom surfaces of steel slabs, base plates, cap plates of columns, and pedestals shall be planed, or heat straightened, and shall have full contact when assembled to the main members. Parts of members in contact with these items shall be milled to true surfaces and correct bevels, after the main sections of these members and the end connection angles have been fully welded, bolted or riveted.

Sole plates of beams and girders shall have full contact with the flange and shall be planed or heat straightened. Cast pedestals shall be planed on surfaces that will be in contact with steel.

Unless shown otherwise on the Plans, the surface finish of bearing and base plates and other bearing surfaces that are to come in contact with each other or with concrete shall meet the following surface roughness requirements as defined in ANSI B46.1, Surface Texture, Roughness, Waviness, and Lay,

Part 1. Surfaces will be evaluated by visual or tactual comparison with roughness comparison specimens.

Sliding Bearings	ANSI	3μm
Bridge Rollers and Rockers	ANSI	6μm
Pins and Pin Holes	ANSI	3μm
Steel Slabs	ANSI	50μm
Heavy Plates in Contact with Shoes to be Welded	ANSI	25μm
Milled Ends of Compression Members, Milled or Ground Ends of stiffeners and Fillers	ANSI	13μm

(k) Field Connections.

When field bolts are required instead of field welding, the girders or beams shall be adjusted so the maximum final clearance between abutting ends of the web plates or flange plates shall be five millimeters. The web splice plates shall be attached using sub-drilled holes in each corner of the splice plate, secured with bolts and the remaining holes shall be drilled. Additional bolts shall be added as the holes are drilled to secure the splice plates to the web. The flange splice cover plates and support bars shall be clamped into position and the bolt holes drilled. Additional bolts shall be added as the holes are drilled to secure the splice plates to the flanges. Other methods of preparing of flange and web field splices may be utilized with written approval of the Engineer.

All holes for bolts except in flanges and webs of beams, girders or stringers shall be either punched or drilled. Material forming parts of a member composed of not more than five thicknesses of metal may be punched two millimeters larger than the nominal diameter of the bolts whenever the thickness of the material is not greater than 20 millimeters for structural steel, 15 millimeters for high-strength steel or 13 millimeters for quenched and tempered alloy steel.

When there are more than five thicknesses or when any of the main material is thicker than 20 millimeters for structural steel, 15 millimeters for high-strength steel, or 13 millimeters for quenched and tempered alloy steel, all holes shall either be sub-drilled or drilled full size.

The diameter of the die for punched holes shall not exceed the diameter of the punch more than two millimeters. If any holes must be enlarged to admit the bolts, such holes shall be reamed. Holes must be clean cut without torn or ragged edges. Poor matching of holes will be cause for rejection.

(l) Shop Assembling for Final Inspection.

All girders, welded plates and rolled wide flange sections of main members shall be assembled, securely supported, adjusted and maintained to proper line, grade, camber and suitable fit-ups unless otherwise provided both in writing and shown on the approved shop plans.

All splice holes shall be drilled and splice plates adequately bolted or pinned in place before the assembly is checked by the inspector.

In making the final assembly, if recutting is necessary to form a uniform width opening for both flanges and/or web, the butt joint shall be finished by precision flame cutting or flame cutting and grinding in a manner that will produce the same smoothness as the precision cut. Mechanical chipping will not be permitted.

Erection angles shall be fitted, drilled and/or reamed and bolted into place while the beams or girders are in the fit-up position in such a manner that standard drift pins can be driven through any combination of holes and the beams or girders can be pulled to correct spacing for field welding when erected at the bridge location.

All assemblies shall be Type "B" unless stated otherwise on the Plans.

Type "A" Assembly (For structures with horizontal curvature transitions, super elevation and/or ramp tie-ins): Not less than two spans (bearing to bearing) laid-out full bridge width, with separators attached at pier points (minimum). When released, pier girders shall be carried back for the next additions. The expansion devices, if attached directly to the structural steel shall be included in position in the assembly. The shop may request lesser width of the structure for lack of shop space in which case the bridge contractor may be back charged for excessive shop inspection trips and expenses.

Type "B" Assembly: Not less than two spans (bearing to bearing) laid-out to correct line with webs vertical or horizontal; two lines minimum assembly. When released, one pier girder, each line, shall be carried back for the next additions.

Type "C" Assembly (for long span, deep girders): Not less than three girder pieces laid-out to correct alignment with webs horizontal; two lines minimum lay down. When released, one girder piece per line shall be carried back for the next additions.

(m) Matchmarking.

All butt joints (girders, expansion devices, end separators under expansion devices or other specialties to be field assem-

bled and welded or bolted into the final unit) shall be matchmarked while shop assembled in the manner indicated as "Typical Matchmark," and shown on the approved detail Plans. A coordinate system of capital letter and numbers shall be used as follows:

(1) Each line of girders shall be marked with a capital letter. The outside line, right of centerline, shall be marked with the first letter of a series. The girders in the next line to the left shall be marked with a second letter of the series, etc., until all lines have been marked.

(2) The field splices (points of contraflexure) shall be marked with numbers. The lowest number shall be placed on the splices nearest abutment number one and the highest number shall be placed on the splices nearest abutment number two. The splices shall be numbered consecutively from abutment number one to abutment number two. In addition to the line and splice marks, matchmarks shall designate the top of the girder and shall be placed on each of the girder ends that comprise the splice and within one meter of the field web splices. Low stress steel die marks shall be placed prior to shop blasting and painting.

Special fit-up found necessary in the shop shall be matchmarked and a corrected set of shop details and erection drawings shall be furnished showing these special fit-ups.

The exposed surface of A-588M and/or other "Weathering" Steel shall not be matchmarked with paint, crayon or any other type of material which will impair the normal weathering process of the steel. Unless otherwise noted on the plans, unpainted weathering steel shall be blast cleaned to meet Steel Structures Painting Council Specification SSPC-SP6. The areas to be blasted shall include the exterior surfaces of the facia girders or beams and the bottom surfaces of the bottom flanges of all girders or beams.

(n) Rejection.

No fabricated elements shall leave the fabrication shop until the inspector has released them for shipment. The acceptance of any material or finished product shall not preclude their subsequent rejection if found defective. Rejected items shall be made acceptable or shall be replaced.

(o) Headed Stud Anchors.

Headed Stud Anchors shall be as specified in Section 1600.

702.06 SHOP PAINTING.

(a) Surface Preparation.

Surfaces to be painted shall be blast cleaned with abrasives to produce a height of profile of 25μm-76μm.

Surfaces shall be cleaned to meet Steel Structures Painting Council Specification SSPC-SP10 (March 1, 1985), Near-White Blast Cleaning. When viewed without magnification the blast cleaned surface shall be free of all visible oil, grease, dirt, dust, mill scale, rust, paint, oxides, corrosion products, and other foreign matter, except for staining which shall be limited to no more than five percent of each 625 square millimeters of surface area and may consist of slight shadows, slight streaks, or minor discolorations caused by stains of rust, stains of mill scale, or stains of previously applied paint.

After blast cleaning, the surface shall be brushed with clean brushes, blown off with clean compressed air, or cleaned by vacuum to remove any trace of blast products on the surface, and also for the removal of abrasives from pockets and corners. The blast cleaned surfaces shall be given a prime coat of paint within twelve hours after cleaning. If cleaned surfaces appear rust tinged before coating is accomplished, they shall be recleaned by the Contractor at his expense.

(b) Weather Conditions.

Paint shall not be applied when the ambient air temperature is below 4° C, when the air is misty, when the steel temperature is 3° C or less above the dew point, or when in the opinion of the Engineer, conditions are otherwise unsatisfactory for work. Paint shall not be applied upon damp or frosted surfaces. Application shall cease when, in the opinion of the Engineer, the air temperature is so high that the spray dries before reaching the surface, resulting in a dry, powdery coating.

(c) Mixing of Paint.

Paint shall be thoroughly mixed before applying, and the pigment shall be kept in suspension. When two-component inorganic zinc silicate primer is to be used, the amount and manner of adding the zinc dust to the liquid portion shall follow the manufacturer's instructions. The mixed paint shall then be strained through a metal screen having a mesh recommended by the manufacturer. Two-component inorganic zinc paint shall be mixed fresh each day and shall not be used past the pot life time as stated in the manufacturer's literature and it shall not be carried over to another day.

(d) Thinning Paint.

Thinning will be permitted when required for proper application but in no case shall more thinner be added than recommended by the manufacturer. When thinner is used it shall be added to the paint during the mixing process. Additional thinner shall not be added to paint after it has been thinned to the proper consistency. Thinner for inorganic zinc silicate paints shall be as recommended by the manufacturer. If it is necessary in cool weather to thin barium metaborate/silicone alkyd paint on account of congealing, this shall be done by heating in hot water or on steam radiators, or by other methods approved by the Engineer. Inorganic zinc silicate paint should not require heating, but is permitted provided care is taken that the paint is protected from all moisture.

(e) Application of Paint.

(1) Inorganic Zinc Silicate.

(1.1) Unless otherwise indicated on the Plans or in the Contract, all structural steel shall receive one coat of inorganic zinc silicate primer in the shop. The inorganic zinc coating shall be so formulated to provide a red tint as a distinct contrast in color with the blast cleaned steel and with the vinyl coat. Painting shall be done in a workmanlike manner using conventional or airless spray. The inorganic zinc coating shall be applied in accordance with the manufacturer's instructions when not in conflict with the Specification, Plans, or Contract. The paint shall be sprayed from a continuously agitated pot.

(1.2) Except where otherwise indicated, all surfaces of the structural steel shall be coated including contact surfaces of high strength bolt connections and areas in contact with concrete except that the entire top of the top flange to which studs are to be applied in the field shall be blast cleaned but shall be left uncoated. The dry film thickness shall be 75 micrometers (nominal) for contact surfaces of high strength bolted connections. Metal surfaces within 150 millimeters of field welds shall not receive the primer until after field welding is completed. The minimum dry film thickness of the prime coat shall be 75 micrometers with a maximum of 150 micrometers on flat areas. More thickness will be allowed in fillet areas if there is no evidence of mud cracking and if the coating is tight. The paint shall be applied according to the manufacturer's instructions so as to produce a tight, uniform coating in close contact with the metal and shall be worked into all corners and crevices.

The finish shall be free of dry spray, runs, sags, and other defects.

(1.3) Machined surfaces such as bearing pins, rockers, bolsters, masonry plates, etc., shall be thoroughly cleaned of machine cutting oil. The ANSI A125 or better surfaces shall be carefully masked prior to blast cleaning the remaining surface. Following blast cleaning, the cleaned surface shall be painted with inorganic zinc primer. The ANSI A125 surfaces shall then be unmasked and about 75 micrometers of an approved wax-based aluminum-filled coating shall be applied to those surfaces.

(1.4) Up to 24 hours after application of inorganic zinc primer, steel found to have a paint thickness less than 75 micrometers but more than 50 micrometers shall be either blast cleaned to bare metal and recoated or have additional inorganic zinc applied to give a minimum of 75 micrometers. Before additional paint is applied, the inorganic zinc primer shall be thinned 1:1 with a solvent recommended by the manufacturer of the material. A coating found to be 50 micrometers or less or a coating more than 24 hours old that is found to be below 75 micrometers shall be blast cleaned to bare metal and the coating reapplied. Excessive film thickness or dry spray shall be removed. Between two hours and 48 hours after application, the inorganic zinc prime coat shall be given a thorough single spray of clean water.

(1.5) Before the structural steel is shipped to the project site, areas with damage to the inorganic zinc coating shall be power or blast cleaned followed by an application of organic zinc primer to a dry film thickness of at least 75 micrometers. The organic zinc primer shall lap onto the existing inorganic zinc primer by at least 25 millimeters beyond any surface preparation.

Shop coated areas found by the Field Engineer to have too little or too much coating thickness, to have mud-cracking, to be soft and easily removed to the steel substrate or judged to be otherwise defective shall be blast cleaned to bare metal and recoated at the expense of the Contractor.

(2) Barium Metaborate/Silicone Alkyd System.

When the barium metaborate/silicone alkyd system is designated on the Plans or in the Contract one coat of barium metaborate primer shall be applied. The minimum wet film thickness shall be 60 micrometers and it shall be applied so that it does not run, sag, crawl or have other defects.

(f) Field Connections.

The unpainted areas near welded field connections shall be coated with boiled linseed oil or other approved rust preventative coating.

(g) Inaccessible Surfaces.

Surfaces not in contact with concrete, but which will be inaccessible after assembling or erection shall be painted with two coats of inorganic zinc primer to produce a total dry film thickness of not less than 150 micrometers, the second coat being applied between four and 24 hours after application of the first coat.

(h) Erection Marks.

No paint shall be applied over erection marks including die marks, until after erection.

702.07 FIELD ERECTION.

(a) General.

The Contractor shall erect the fabricated structure and do all work required to complete the structure as covered by the Contract, all in accordance with the Plans and Specifications.

The Contractor shall provide all falsework, tools, machinery and appliances, including drift pins and fitting-up bolts necessary for the expeditious handling of the work, and upon completion of the erection shall remove same together with all other obstructions or debris resulting from his operations.

(b) Erection Plans.

The Contractor shall furnish detail Plans for the erection of the structure, including shop details, camber diagrams, list of field bolts, and copy of shipping statements showing a list of parts and their mass.

(c) Inspecting, Handling, and Storing Materials.

Material and workmanship not previously inspected will be inspected after delivery to the site of the work. Material to be stored shall be placed on skids above the ground. It shall be kept clean and properly drained. Girders and beams shall be stored upright. Long members, such as columns and chords, shall be supported on skids placed near enough together to prevent injury from deflection.

(d) Falsework.

The falsework shall be properly designed and substantially constructed and maintained for the loads to be supported.

Seven copies of detailed Plans for falsework and cofferdam shall be submitted for all structures as shown in subsection 701.03 (b).

(e) Methods and Equipment.

Before starting work the Contractor shall inform the Engineer as to the method of erection he proposes to follow, and the amount and character of equipment he proposes to use, which shall be subject to the approval of the Engineer. The approval of the Engineer shall not be considered as relieving the Contractor of the responsibility for the safety of his method or equipment or from carrying out the work in full accordance with the Plans and Specifications.

(f) Bearings and Anchorage.

Masonry bearing plates shall not be placed upon bridge seat bearing areas which are improperly finished, deformed or irregular and not until elevations have been verified. Bearing plates shall be set level in exact position and shall have a full and even bearing upon the masonry. Unless otherwise indicated on the Plans or directed by the Engineer, they shall be placed on mats or pads made in accordance with Section 1701.

The anchor bolts shall be set in accordance with Section 830 and preferably, if construction conditions permit, by first setting the bearing devices and superstructure and then drilling the holes for the anchor bolts. Anchor bolts required to be cast in place shall be in accordance with details shown on the Plans. The location of the anchor bolts in relation to the slotted holes in the expansion shoes shall be varied with the prevailing temperature. The nuts on anchor bolts at the expansion ends of spans shall be adjusted to permit the free movement of the span, and either lock nuts shall be provided or the threads of the anchor bolts burred.

(g) Straightening Bent Material.

No bent or twisted member shall be put in place until all defects are corrected. Members seriously damaged in handling shall be rejected. The straightening of plates and angles or other shapes shall be done by approved methods which will not produce fracture or other injury. The metal shall not be heated unless permitted by the Engineer, in which case the

straightening shall be at a temperature no higher than 590° C as determined by a Temple Stick or equivalent. After heating, the metal shall be allowed to cool as slowly as possible.

Following the straightening of a bend or buckle, the surface of the metal shall be carefully inspected for evidence of fracture.

(h) Assembling steel.

The parts shall be accurately assembled as shown on the Plans and erection diagrams utilizing the matchmarks. Bearing surfaces and surfaces to be in permanent contact shall be cleaned before the members are assembled. The material shall be carefully handled so that no parts will be bent, broken, or otherwise damaged. Hammering which will injure or distort the members shall not be allowed. Excessive misfitting may require revision of erection details and/or shop drawings by the Contractor.

(i) Field Connections by Bolting.

(1) General. Before bolting, splices and field connections shall have at least 1/4 of the holes filled with bolts and 1/4 with cylindrical erection pins. Splices and connections carrying any loads other than workers and small tools during erection shall have at least 3/4 of the holes filled.

Fitting-up bolts shall be of the same nominal diameter as the high-strength bolts to be used and cylindrical erection pins shall be one millimeter larger.

When high-strength steel bolts are used, these bolts may be used and remain in place in lieu of the fit-up bolts specified above.

(2) Field Bolts (Except High-Strength Steel Bolts).

Bolted connections shall have unfinished or finished bolts as specified. Unfinished or machined bolts shall have hexagonal heads and nuts and shall be of such length that they will extend entirely through the nut but not more than six millimeters beyond. Bolts in tension shall have two nuts.

Unfinished bolts in shear shall have not more than one thread within the grip. The diameter of the unfinished bolt shall not be more than two millimeters smaller than the diameter of the hole.

The threads of machined bolts shall be entirely outside the grip. The bolts shall be given a finishing cut. Approved nut locks or flat washers six millimeters thick shall be used under nuts and the threads burred. The holes for machined bolts shall

be reamed and their diameters shall be not more than one millimeter greater than the diameter of the finished bolt. In bolted connections, the bolts shall be drawn up tight and the threads burred at the face of the nut with a pointed tool.

(3) Pin Connections.

Pilot and driving nuts shall be used in driving pins. Pins shall be so driven that the members shall take full bearing on them. Pin nuts shall be screwed up tight and the threads burred at the face of the nut with a pointed tool.

(4) Misfits.

Corrections of minor misfits and a reasonable amount of reaming, cutting, and chipping will be considered a legitimate part of the erection. Any error in shop work which prevents the proper assembling and fitting up of parts by the moderate use of drift pins or a moderate amount of reaming and slight chipping or cutting, shall be reported immediately to the Engineer, and his approval of the method of correction obtained. The correction shall be made in the presence of the Engineer.

(5) Facilities for Inspection.

The work shall be subject at all times to inspection by the Engineer, who shall be furnished all facilities required for a thorough inspection of workmanship.

(j) Field Bolting (High-Strength Steel Bolts and Washers).

(1) Bolted Parts.

(1.1) The slope of surfaces of bolted parts in contact with the bolt head and nut shall not exceed 2.86% with respect to a plane normal to the bolt axis. Bolted steel parts shall not be separated by gaskets and shall fit solidly together after the bolts are tightened. Holes may be punched, sub-punched and reamed, or drilled, as required by the applicable code or specification. Standard holes shall have a diameter nominally two millimeters in excess of the nominal bolt diameter.

Where shown in the design drawings and at other locations approved by the Engineer, oversize, short slotted, and long slotted holes may be used with high-strength bolts 16 millimeters in diameter and larger in connections assembled as follows:

(1.1.1) Oversize holes may have nominal diameters up to: 4 millimeters larger than bolts 20 millimeters and less in diameter, six millimeters larger than bolts 22 and 24 millimeters in diameter, and eight millimeters larger than bolts 27 millimeters and greater in diameter. They may be used in any or all plies of friction-type connections. Hardened washers shall be installed over oversize holes in an outer ply and shall have a size sufficient to completely cover the hole after installation.*

(1.1.2) Short slotted holes are nominally equal to a standard hole width and have a length which does not exceed the oversize diameter provisions of (1.1.1) by more than two millimeters. They may be used in any or all plies of friction-type or bearing-type connections. The slots may be used without regard to direction of loading in friction-type connections but shall be normal to the direction of the load in bearing-type connections. Hardened washers shall be installed over short slotted holes in an outer ply and shall have a size sufficient to completely cover the slots after installation.*

(1.1.3) Long slotted holes are nominally equal to a standard hole width and have a length more than allowed in (1.1.2) but not more than $1^1/_2$ times the bolt diameter. The slots may be used without regard to direction of loading in friction-type connections, but shall be normal to the direction of the load in bearing-type connections.

Long slotted holes may be used in only one of the connected parts of either a friction-type or bearing-type connection at an individual faying surface.

Where long slotted holes are used on an outer ply, a plate washer or continuous bar of at least eight millimeters thickness with standard holes shall be provided. This washer or bar shall be of structural grade material, but need not be hardened. If hardened washers are required to satisfy specifications, the hardened washers shall be placed over the outer surface of the plate washer or bar.* These washers or bars shall have a size sufficient to completely cover the slots after installation.

* When A490M bolts 27 millimeters in diameter are used in slotted or oversize holes in external plies, a single hardened washer conforming to ASTM F436M, except with eight millimeters minimum thickness, shall be used in lieu of the standard washer.

(1.2) When assembled, all joint surfaces, including those adjacent to the bolt heads, nuts or washers, shall be free of scale, except tight mill scale, and shall also be free of burrs, dirt and other foreign material that would prevent solid seating of the parts. Paint is permitted unconditionally in bearing-type connections.

(2) Installation.

(2.1) Fastener Tension. Fasteners shall be tightened in properly aligned holes to provide, when all fasteners in the joint are tight to the requirements shown in Table 1.

Threaded bolts shall be tightened by methods described in (2.3). If required because of bolt entering and wrench operation clearances, tightening may be accomplished by turning the bolt while the nut is prevented from rotating.

Impact wrenches, if used, shall be of adequate capacity and sufficiently supplied with air to perform the required tightening of each bolt in approximately ten seconds.

(2.2) Washers. Shop drawings shall indicate where washers are required. When washers are used they shall be hardened. A325 fasteners may be installed without washers except as noted in subsection 702.07 (j) (1). A490 bolts installed shall have a hardened washer under the element (nut or bolt head) turned in tightening and as provided in subsection 702.07 (j) (1), if applicable. Additionally, a hardened washer shall be used with all A490 bolts under the element not turned in tightening if the material against which it bears has a specified minimum yield point less than 300 megapascals.

Where an outer face of the bolt parts has a slope greater than 1:20 with respect to a plane normal to the bolt axis, a beveled washer shall be used to compensate for the lack of parallelism.

(2.3) Bolt Tightening. The turn-of-nut method shall be used to provide the required bolt tension. Bolts shall be installed in all holes of the connection and brought to a "snug tight" condition. Snug tight is defined as the tightness that exists when the plies of the joint are in firm contact. This may be attained by a few impacts of an impact wrench or the full effort of a man using an ordinary spud wrench. Snug tightening shall progress systematically from the most rigid part of the connection to the free edges, and then the bolts of the connection shall be retightened in a similar systematic manner as necessary until all bolts are simultaneously snug tight and the connection is fully compacted. Following this initial operation, all bolts in the connection shall be tightened further by the applicable amount of rotation specified in Table 1. During the tightening operation, there shall be no rotation of the part not turned by the wrench. Tightening shall progress systematically from the most rigid part of the joint to its free edges. Appropriate marks shall be placed on the bolt and the nut so that the amount of nut rotation relative to the bolt can be verified.

(2.4) All galvanized nuts shall be lubricated with a lubricant containing a visible dye so a visual check can be made for the lubricant at the time of field installation. Black bolts must be "oily" to the touch when installed. Weathered or rusted bolts shall be cleaned and re-lubricated prior to installation.

(2.5) Reuse. A490M and A325M bolts shall not be reused. Retightening of previously tightened bolts which have been tightened in accordance with Table 1 shall be considered a reuse.

TABLE 1 - NUT ROTATION (*) FROM SNUG TIGHT CONDITION

Bolt Length (as measured from underside of head to extreme end of point)	Disposition of Outer Faces of Bolted Parts		
	Both faces normal to bolt axis	One face normal to bolt axis and other face sloped not more than 1:20 (bevel washer not used)	Both faces sloped not more than 1:20 from normal bolt axis (bevel washer not used)
Up to and including 4 diameters	1/3 turn	1/2 turn	2/3 turn
Over 4 diameters but not exceeding 8 diameters	1/2 turn	2/3 turn	5/6 turn
Over 8 diameters but not exceeding 12 diameters	2/3 turn	5/6 turn	1 turn
Over 12 diameters		The method of tightening bolts over 12 diameters shall be as shown on the shop details and approved by the Engineer.	

* Nut rotation is relative to the bolt, regardless of the element (nut or bolt) being turned. For bolts installed by 1/2 turn and less, the tolerance should be plus or minus 30 degrees; for bolts installed by 2/3 turn and more, the tolerance should be plus or minus 45 degrees.

(3) Inspection.

(3.1) The inspector shall determine that the requirements of this Specification are met in the work.

(3.1.1) The inspector shall observe the installation of bolts to determine that the procedure is properly used and shall determine that all bolts are tightened.

(k) Field Connections by Welding.

Field welding of structural steel shall be in accordance with the applicable requirements of the "Bridge Welding Code," ANSI/AASHTO/AWS D1.5-88, with exceptions and/or additions contained in Specifications included in the Contract.

Erection holes in the girder webs shall be filled with button-head or hex head type bolts equipped with regular hex nuts. Only one type of bolt head shall be used. The heads of the bolts shall be placed on the outside faces of the webs.

Fit up bolts or other methods approved by the Engineer may be used for closing erection holes in other parts of the structure.

702.08 FIELD PAINTING. (New Structures)

(a) Renewing Shop Coat.

When a shop coat has been applied, the Contractor shall be responsible for field touch up of the shop coat including clean-

ing and painting of field connections, welds or bolts and all damaged or defective paint or rusted areas.

Coating found to be deficient in coating thickness after arrival at the construction site shall be blast cleaned to bare metal and recoated at the expense of the Contractor.

The Contractor shall make every effort to protect the coated steel from being walked on and contaminated with ground-in soil prior to erection. Coated steel with ground-in soil shall be washed with water. If in the opinion of the Field Engineer the coating is still contaminated, the remaining soil shall be removed by light blast cleaning.

Paint shall not be applied when the ambient air temperature is below 4° C, when the air is misty, when the steel temperature is 3° C or less above the dew point or when in the opinion of the Engineer conditions are otherwise unsatisfactory for work.

Touch-up painting of areas with continuous or discontinuous damage to the inorganic zinc coating over an area up to one square meter in size shall be power or blast cleaned to an SSPC-SP10 (March 1, 1985), Near-White Blast Cleaning, followed by an application of organic zinc primer to a dry film thickness of at least 75 micrometers and shall lap onto the existing inorganic zinc coating by at least 25 millimeters beyond any surface preparation.

Areas with continuous or discontinuous damage to the inorganic zinc coating over an area one square meter or more in size shall have the entire flange or web blast cleaned to an SSPC-SP10 (March 1, 1985), Near-White Blast Cleaning, followed by an application of inorganic zinc as specified in Section 702.06. After 24 hours and in less than 48 hours a coat of organic zinc shall be applied by brush or spray where the newly applied inorganic zinc meets or laps over the shop-applied inorganic zinc.

The heads, nuts, and threaded areas of bolts and the edges of bolted splice plates shall be thoroughly cleaned of all oil or grease and then blast cleaned followed by an application of organic zinc primer. Organic zinc primer shall also be applied to the contact edge of the splice plate.

Galvanized drains shall have an application of a polyvinyl butyral wash primer of about 10 micrometers in thickness prior to application of the vinyl topcoat. The application and cure time before topcoating shall follow the manufacturer's recommendations.

In those cases where headed stud anchors are to be applied in the field, after the studs are applied the entire top of the top

flange and studs shall be blast cleaned to bare metal in conformance with Steel Structures Painting Council Specification SSPC-SP6 (March 1, 1985), Commercial Blast Cleaning, followed by the application of organic zinc primer to a dry film thickness of at least 75 micrometers. Special attention shall be given to assure that the welds have been thoroughly blast cleaned and the full amount of coating is applied. It is not expected that the underside of the stud head or the top 25 millimeters of the stud will receive full paint thickness.

(b) Application of Field Coat.

(1) Vinyl Finish Coat.

Unless otherwise specified on the Plans or in the Contract, field painting shall consist of one coat of vinyl paint applied after erection. The minimum dry film thickness of the final coat shall be 75 micrometers with a maximum of 150 micrometers on flat areas. A thickness in excess of 150 micrometers will be allowed in fillet areas if there is no evidence of mud cracking and if the coating is tight. The final field coat shall be applied so that it does not run, sag, crawl, or have other defects. If bubbles have formed, they shall be allowed to collapse and an additional 25 micrometers (approximately) of vinyl finish coat shall be applied over the area where the bubbling occurred.

(2) Barium Metaborate/Silicone Alkyd System.

Silicone alkyd gray paint shall be used for the first field coat. Silicone alkyd dark green paint shall be used for the final field coat. The minimum wet film thickness for each coat shall be 65 micrometers. Each coat shall be applied so that it does not run, sag, crawl or have any other defects.

(3) The general requirements for paints, their mixing and application, weather conditions, cleaning of surfaces to be painted and quality of workmanship, as specified for shop painting, shall apply to field painting. Thinner for vinyl paint shall be as recommended by the manufacturer. When not in conflict with the specifications, vinyl paint shall be applied in accordance with the manufacturer's current instructions which shall be furnished to the Engineer by the Contractor. The Contractor shall furnish and use adequate staging and scaffolding satisfactory to the Engineer and no climbing over or working on finished painted members will be permitted.

(c) Protection of Property.

The Contractor shall protect pedestrian, vehicular and other traffic upon or underneath the bridge, all adjoining property

along the right of way, all pipes or ducts owned by utility companies, and also all portions of the bridge superstructure and substructure against damage or disfigurement by spatters, splashes, smirches and spray of paint material. Any damage so resulting shall be entirely the responsibility of the Contractor.

(d) Removal of Paint.

Any metal coated with impure or unauthorized paint shall be thoroughly cleaned and repainted to the satisfaction of the Engineer, at the expense of the Contractor.

(e) Date of Painting and Type of Paint System.

At the completion of the work, the Contractor shall stencil in black paint, the date of painting the bridge and a code representing the paint types on the bridge. The letters shall be capitals, not less than 50 millimeters nor more than 75 millimeters in height. The date stencil shall contain the word "PAINTED" and shall show the month and the year in which the painting was completed.

The paint type stencil shall show a code appropriate to the paints on the bridge, the code selection is to be made from the following list:

Inorganic Zinc/Vinyl	IZ/V
Organic Zinc/Vinyl	OZ/V
Red Lead/Barium Metaborate/Aluminum	RL/BM/AL
Basic Lead Silico Chromate/Barium Metaborate/Silicone Alkyd	BLSC/BM/SA
Barium Metaborate/Silicone Alkyd	BM/SA

The legend shall be stenciled on the right hand side of each end of the bridge on the outside face of the outside stringer near the ends of the bridge.

702.09 REPAINTING EXISTING STEEL BRIDGES.

Change to Inorganic Zinc-Vinyl System or Organic Zinc-Vinyl System.

(a) Description.

This work consists of complete removal of an existing paint system and repainting a bridge with the inorganic zinc-vinyl or organic zinc-vinyl paint system and shall include the cleaning and preparation of the metal surfaces, the furnishing, application and protection of the paint coatings, and the protection from paint of all surfaces not to be painted.

The surfaces to be cleaned and painted shall include all surfaces of the steel work, including iron or steel casings and metal railings that have been previously field painted or are accessible for field painting. Tops of expansion guard plates, bars or angles across the roadway at joints between adjacent spans on which vehicular traffic comes in direct contact, and pipes or ducts owned by utility companies, will not require painting under this work.

(b) General Construction Requirements.

(1) Surface Preparation.

Surfaces to be painted shall be blast cleaned with abrasives producing a height of profile of 25 — 75 micrometers. The blast cleaned surfaces shall meet the following requirements for the type of primer to be applied:

(1.1) Surfaces shall be cleaned to meet Steel Structures Painting Council Specification SSPC-SP10 (March 1, 1985), Near-White Blast Cleaning. When viewed without magnification the blast clean surface shall be free of all oil, grease, dirt, dust, mill scale, rust, paint, oxides, corrosion products, and other foreign matter, except for staining which shall be limited to no more than five percent of each 625 square millimeters of surface area and may consist of slight shadows, slight streaks, or minor discoloration caused by stains of rust, mill scale, or previously applied paint.

(1.2) Where lower chords, braces of truss spans or other members are separated by tie plates or fills, the spaces between backs of angles or channels, equal to the thickness of the tie plates or fills, shall be well cleaned of all rust and loose paint. Tight paint found between splice plates, beneath rivet heads and in other such narrow openings may be left intact. Special care shall also be taken to remove the rust often found along the edges of the top flanges of I-beams at their line of contact with a concrete deck.

(1.3) After blast cleaning the surfaces shall be brushed with clean brushes, blown off with clean compressed air, or cleaned by vacuum to remove any trace of blast products on the surface, and also for the removal of abrasives from pockets and corners. The blast cleaned surfaces shall be given a prime coat of paint within twelve hours after cleaning. If cleaned surfaces appear rust tinged before coating is accomplished, they shall be recleaned by the Contractor at his expense.

(2) Weather Conditions.

Paint shall not be applied when the ambient air temperature is below, .4° C, when the air is misty, when the steel temper-

ature is 3° C or less above the dew point or when, in the opinion of the Engineer, conditions are not satisfactory for the work. It shall not be applied upon damp or frosted surfaces. Application shall cease when, in the opinion of the Engineer, the ambient air temperature is so high that the spray dries before reaching the surface, resulting in a dry powdery coat of zinc.

(3) Thinning Paint.

Thinning will be permitted when required for proper application but in no case shall more thinner be added than recommended by the manufacturer. When thinner is used, it shall be added during the mixing process. Additional thinner shall not be added to paint after it has been thinned to the proper consistency. Thinner for inorganic zinc silicate, organic zinc and vinyl paints shall be as recommended by the manufacturer.

(4) Scaffolding.

The Contractor shall furnish and use adequate staging and scaffolding satisfactory to the Engineer and no climbing over or working on finished painted members will be permitted.

The Contractor shall furnish to the Engineer means of reaching any point of the bridge for the purpose of inspecting the cleaning and painting of the steel. Such means may include scaffolding, snoopers and cherry pickers.

(5) The sequence of the work shall be arranged so as to provide ample time for each paint coating to dry before the next coat of paint is applied. In no case shall a coat of paint be applied until the previous coat has been inspected by the Engineer and found to be dry and hard throughout the entire film thickness.

(6) Protection of Property.

The Contractor shall protect pedestrian, vehicular and other traffic upon or underneath the bridge, all adjoining property along the right of way, and also all portions of the bridge superstructure and substructure against damage or disfigurement by spatters, splashes, smirches and spray of paint materials. Any damage so resulting shall be entirely the responsibility of the Contractor.

(7) Maintaining Traffic.

Traffic shall be maintained over the existing bridge at all times during the work of cleaning and painting, unless this work is being performed in conjunction with other construction work where traffic is being detoured. While actual work is being performed, one half of the roadway on that span may be closed to traffic, at the option of the Contractor, with one-way

traffic being maintained over the other half of the roadway. During the time that one half of the roadway is closed to traffic the Contractor shall be required to utilize a minimum of two flaggers in conjunction with other necessary traffic control devices. The additional traffic control devices and flaggers are subsidiary to other items of the Contract. At all other times when actual work is not being performed, the entire bridge roadway shall be kept open to traffic.

(8) In addition to the general requirements shown above, painting shall conform to additional requirements as follows:

(8.1) Inorganic zinc silicate or organic zinc paint as designated on the Plans or in the Contract shall be used for the prime coat on the structural steel and shall be so formulated as to produce a red tint to produce a distinct contrast in color with the blast cleaned metal surfaces and with the vinyl coat. Vinyl finish coat shall be used for the final field coat.

(8.2) Mixing of Paint. Paint shall be thoroughly mixed before application and the pigment shall be kept in suspension. Inorganic zinc paint will be either the single component type or the two component type. When the two component type is used, the amount and manner of adding the zinc dust to the liquid portion shall follow the manufacturer's instructions. Organic zinc paint will be the single component type. The mixed paint shall then be strained through a metal screen having a mesh recommended by the manufacturer. Two-component inorganic zinc paint shall be mixed fresh each day, shall not be used past the pot life time as stated in the manufacturer's literature, and shall not be carried over to another day.

(8.3) Application. Painting shall be done in a workmanlike manner using conventional or airless spray. The minimum dry film thickness of the prime coat shall be 75 micrometers with a maximum of 150 micrometers on flat areas. More thickness will be allowed in fillet areas if there is no evidence of mud cracking and if the coating is tight. The coating shall be applied so that it is free of dry spray, runs, sags, and other defects. When not in conflict with this specification, the paint shall be applied according to the manufacturer's instructions to produce a tight uniform coating in close contact with the metal and shall be worked into all corners and crevices. The paint shall be sprayed from a continuously agitated pot. If bubbles have formed, they shall be allowed to collapse and an additional 25 micrometers (approximate) of vinyl finish coat shall be applied over the area where the bubbling occurred. Following application and drying, the inorganic zinc prime coat shall be given

a thorough spray of clean water at least 24 hours before the finish coat is applied. The organic zinc paint will not require a water spray.

Before the vinyl finish coat is applied, all surfaces to be coated shall be completely free of moisture.

(9) Spray painting may be waived in those places where it is not possible to blast clean. These areas shall be cleaned by hand as well as possible, followed by application with a brush or dauber of a heavy coat of organic zinc primer.

(10) Removal of Paint.

If the paint is unsatisfactory to the Engineer, the paint shall be removed and the metal thoroughly cleaned and repainted at the expense of the Contractor.

(c) Date of Painting and Type of Paint System.

At the completion of the work, the Contractor shall stencil in black paint, the date of painting the bridge and a code representing the paint type on the bridge. The letters shall be capitals, not less than 50 millimeters nor more than 75 millimeters in height. The date stencil shall contain the word "PAINTED" and shall show the month and the year in which the painting was completed.

The paint type stencil shall show a code appropriate to the paints on the bridge, the code selection is to be made from the following list:

Inorganic Zinc/Vinyl	IZ/V
Organic Zinc/Vinyl	OZ/V
Red Lead/Barium Metaborate/Aluminum	RL/BM/AL
Basic Lead Silico Chromate/Barium Metaborate/Silicone Alkyd	BLSC/BM/SA
Barium Metaborate/Silicone Alkyd	BM/SA

The legends shall be stenciled on the right hand side of each end of the bridge on the outside face of an outside stringer near the ends of the bridge.

702.10 REPAINTING EXISTING STEEL BRIDGES - PAINTING IN KIND.

(a) Description.

This work shall consist of repainting the existing structure as needed but with lead-free paints being applied rather than matching lead-containing paints and shall include the cleaning and preparation of the metal surfaces, the furnishing, ap-

plication and protection of the paint coatings, and the protection from paint of all surfaces not to be painted.

The surfaces to be cleaned and painted shall include all surfaces of the steel work, including iron or steel casings and metal railings that have been previously field painted or are accessible for field painting. Tops of expansion guard plates, bars or angles across the roadway at joints between adjacent spans on which vehicular traffic comes in direct contact, and pipes or ducts owned by utility companies, will not require cleaning and painting under this work.

Repainting a structure with the same paint system will generally be in accordance with the requirements of Section 702.09. Exceptions and additions to those requirements are as follows:

(b) General Construction Requirements.

(1) Cleaning.

The surfaces to be painted shall first be cleaned. The cleaning shall remove all rust, and all loose, cracked or peeling paint, soot, dirt, oil, grease, cinders and any foreign material. Where the old paint has deteriorated to such an extent that the surface of the old paint has a rusty appearance due to the lack of adequate protection of the metal or there is steel that has become exposed due to loss of coating, the old paint shall be removed and all exposed steel shall be cleaned as required below followed by a coat of the paint specified for spot painting. Where the old paint has remained in a condition to prevent the metal from rusting, the cleaning need remove only the loose, chalked or otherwise defective surface of the old paint. However, paint that is easily removed by blast cleaning shall be considered to be inadequate for future protection and shall be removed regardless of whether the surface paint appears to be in good condition and the underlying steel is not rusted. Small, widely spaced spots of damage five millimeters or less in diameter on an otherwise tight coating shall be hand cleaned by scraper or chisel followed by removal of corrosion products by sandpaper. The Contractor will not be required to remove old paint that has merely discolored, checked, crazed or has been stained, where such old paint is otherwise satisfactory, adheres firmly to and protects the metal, and is not removed by the usual application of the cleaning operations. Checking is characterized by slight breaks in the surface of the paint film but are not deep enough for the underlying paint to be visible.

Cleaning shall be accomplished by both blast cleaning and hand methods. Areas of actual rust and blisters shall be

cleaned to the bare metal in conformance with Steel Structures Painting Council Surface Preparation Specification SSPC-SP6, (March 1, 1985), Commercial Blast Cleaning, except that wet blasting will not be permitted. When viewed without magnification the blast cleaned surface shall be free of all visible oil, grease, dirt, dust, mill scale, rust, paint, oxides, corrosion products, and other foreign matter, except for stains which shall be limited to no more than 33 percent of each 625 square millimeters of surface area and may consist of light shadows, slight streaks, or minor discolorations caused by stains of rust, stains of mill scale, or stains of previously applied paint. Slight residues of rust and paint may also be left in the bottom of pits if the original surface is pitted.

Oil and grease shall be removed by the use of a chlorinated hydrocarbon solvent such as trichloroethane or other approved non-flammable solvent. Hand cleaning shall be accomplished by the use of metal brushes, scrapers, chisels, hammers, sand paper or other effective means meeting the approval of the Engineer.

Where lower chords, braces of truss spans or other members are separated by tie plates or fills, the spaces between backs of angles or channels, equal to the thickness of the tie plates of fills, shall be well cleaned out. Special care shall also be taken to remove the rust often found along the edges of the top flanges of I-beams at their line of contact with a concrete deck.

After blast cleaning the surfaces shall be brushed with clean brushes, blown off with clean compressed air, or cleaned by vacuum to remove any trace of blast products on the surface, and also for the removal of abrasives from pockets and corners. The blast cleaned surfaces shall be given a spot coat of paint within twelve hours after cleaning. Surfaces that show signs of rust before coating is accomplished shall be recleaned by the Contractor at his expense.

(2) Painting.

Painting shall be in accordance with the paint system specified in the Contract.

(c) Painting-in-Kind (Bridges with the Red Lead-Aluminum and Basic Lead Silico-Chromate Paint Systems).

(1) Red Lead-Aluminum Paint System.

(1.1) Spot Painting. Spot painting shall consist of the application of one coat of barium metaborate primer on all areas where the old paint has been removed or damaged either prior to or during the cleaning operations, so that the bare metal is

exposed. On surfaces where small areas of metal at closely spaced intervals are exposed, the spot painting shall consist of a complete coating of barium metaborate primer to facilitate application and to insure a coating on all exposed areas of the steel, regardless of size.

The minimum wet film thickness of the primer coat shall be 75 micrometers. The paint shall be applied so that it does not run, sag, crawl or have other defects.

(1.2) Painting. Tinted aluminum paint shall be used for the first field coat on the structural steel. The minimum wet film thickness of the first coat shall be 50 micrometers.

Untinted aluminum paint shall be used for the final field coat. The minimum wet film thickness of the final coat shall be 50 micrometers. Each coat shall be applied so that it does not run, sag, crawl or have other defects.

(1.3) Mixing of Paint. Paint shall be thoroughly mixed before applying and the pigments shall be kept in suspension. Aluminum paint will consist of two components, paste and vehicle, which must be blended prior to use.

(1.4) Thinner. Thinner, as needed, shall be added to the paint during the mixing process. If it is necessary in cool weather to thin the paint on account of congealing, this shall be done by heating in hot water or on steam radiators, or by other methods approved by the Engineer.

(1.5) Application. Painting shall be done in a neat and workmanlike manner, using brushes, rollers or a pneumatic spray. Any structure or portion of a structure where pneumatic spraying will not be permitted will be specifically shown on the Plans or Contract. If applied with a pneumatic spray, the paint shall be brushed out where necessary and the workmanship shall be equal to first class brush work. Paint shall be worked into all corners and crevices on surfaces which are inaccessible to paint brushes. This paint shall be applied with sheepskin daubers made for that purpose or specially designed pneumatic extension spray nozzles.

(1.6) Weather Conditions. Paint shall not be applied when the ambient air temperature is below 4° C, when the air is misty, when the steel temperature is 3° C or less above the dew point or when, in the opinion of the Engineer, conditions are otherwise unsatisfactory for the work.

(2) Basic Lead Silico-Chromate System.

(2.1) Spot Painting. Spot painting shall consist of the application of one coat of barium metaborate primer on all areas where the old paint has been removed or damaged either prior

to or during the cleaning operations, so that the bare metal is exposed. On surfaces where small areas of metal at closely spaced intervals are exposed, the spot painting shall consist of a complete coating of barium metaborate primer to facilitate application and to include a coating on all exposed areas of the steel, regardless of size.

The minimum wet film thickness of the primer coat shall be 75 micrometers. The paint shall be applied so that it does not run, sag, crawl or have other defects.

(2.2) Painting. Silicone alkyd gray paint shall be used for the first field coat on the structural steel. The minimum wet film thickness of the first coat shall be 65 micrometers. Silicone alkyd dark green paint shall be used for the final field coat. The minimum wet film thickness of the final coat shall be 65 micrometers. Each coat shall be applied in accordance with the requirements in Sections 702.10(c) (1.3), (1.4), (1.5) and (1.6) of this Specification.

(d) Painting-in-Kind (Bridges with the Inorganic Zinc-Vinyl Paint System.)

(1) Spot Painting. Spot painting shall consist of the application of one coat of organic zinc paint on all areas where the old paint has been removed or damaged either prior to or during the cleaning operations, so that the bare metal is exposed. The minimum dry film thickness of the spot coat shall be 75 micrometers.

The organic zinc primer shall be applied so as to cover the exposed bare metal and then be continued at least 25 millimeters onto the existing vinyl coating. Organic zinc will not require a water spray prior to application of the vinyl finish coat.

(2) Painting. A vinyl finish coat shall be used for the final finish coat. The minimum dry film thickness for the finish coat shall be 75 micrometers. The finish coat shall be applied in accordance with the requirements stipulated for the change to inorganic zinc-vinyl system in Section 702.09.

(e) Date of Painting and Type of Paint System.

At the completion of the work, the Contractor shall stencil in black paint, the date of painting the bridge and a code representing type paint types on the bridge. The letters shall be capitals not less than 50 millimeters nor more than 75 millimeters in height. The date stencil shall contain the word "PAINTED" and show the month and year in which the painting was completed.

The paint type stencil shall show a code appropriate to the paints on the bridge, the code selection is to be made from the following list:

Inorganic Zinc/Vinyl	IZ/V
Organic Zinc/Vinyl	OZ/V
Red Lead/Barium Metaborate/Aluminum	RL/BM/AL
Basic Lead Silico Chromate/Barium Metaborate/Silicone Alkyd	BLSC/BM/SA
Barium Metaborate/Silicone Alkyd	BM/SA

The legends shall be stenciled on the right hand side of each end of the bridge on the outside face of an outside stringer near the ends of the bridges.

702.11 METHOD OF MEASUREMENT.

Painting of new structures will not be measured or paid for directly but shall be considered subsidiary to structural steel. Painting of old existing structures shall be measured by the lump sum for "Bridge Painting" which price shall include all cleaning and painting of areas designated to be painted. Maintenance of traffic, where required, will not be measured and paid for directly but shall be considered subsidiary unless the Contract contains the item "Traffic Control". Headed Stud Anchors shall be measured per each. Structural Steel, Cast Steel, Cast Iron and Bearing Devices shall be measured by the kilogram complete in place as determined from the Engineer's computed mass, or as computed from the approved drawings or Plans.

The computed mass will be obtained by use of the following rules:

Mass of Structural Steel	7840 kg per cu. m.
Mass of Bronze	8720 kg per cu. m.
Mass of Cast Iron	7200 kg per cu. m.

The mass of rolled shapes will be computed on the basis of the length shown on the approved shop drawings and the nominal mass per meter as listed in the latest AISC handbook with deductions made for copes, cuts and blocks.

The mass of rolled plates and bars will be determined on the basis of the computed mass for the dimensions shown on the approved shop drawings or on the basis of nominal mass listed in the latest AISC handbook.

The mass of castings shall be computed from the dimensions shown on the Plans.

The mass of machined plates and slabs shall be based upon the Plan thickness, provided the finished thickness falls within the limits that are specified on the Plans as tolerances.

No allowance will be made for fasteners including erection bolts, button head bolts used for filling erection bolt holes, high strength bolts for permanent connections, temporary laterals or similar items.

No measurement shall be made of weld metal deposited in fillets, or otherwise outside the lines and surfaces of the connected parts; but no deductions shall be made from the computed quantities of such work to allow for material that is removed by beveling or other cutting and subsequently replaced with weld metal.

702.12 BASIS OF PAYMENT.

The amount of completed and accepted work, measured as provided above, shall be paid for at the Contract lump sum price for "Bridge Painting" or at the Contract unit price per kilogram for "Structural Steel", "Cast Steel", "Cast Iron", or "Bearing Devices", and per each for "Headed Stud Anchors", which prices shall be full compensation for furnishing, fabricating, welding, delivering, erecting, radiographic inspection, painting and placing all materials, for all labor, equipment, tools and incidentals necessary to complete the work.

Payment for structural steel may be made in the following manner:

90 percent of the Contract quantity for structural steel is to be paid when all the structural steel is completely fabricated, in place, inspected and ready to weld or bolt in accordance with the Plans and Specifications.

95 percent of the Contract quantity for structural steel is to be paid when all the structural steel has been welded or bolted, in accordance with the Plans and Specifications. If painting of the structural steel is not required, then 100 percent will be paid at this time.

100 percent of the Contract quantity is to be paid when all the structural steel has been painted in accordance with the Plans and Specifications, when painting of the structural steel is part of the Contract.

SECTION 703

REINFORCING STEEL

703.01 DESCRIPTION.

This work shall consist of furnishing and placing reinforcing steel in accordance with these specifications and conformity with the Plans.

BID ITEMS

Reinforcing Steel. (*) (**)

* Grade.

** Epoxy Coated.

703.02 Materials.

Materials shall conform to the requirements provided in the Materials Division.

Reinforcing Steel	Section 1600
Reinforcing Steel (epoxy coated)	Section 1600

703.03 CONSTRUCTION REQUIREMENTS.

(a) Protection and Storage.

Reinforcing steel shall be protected at all times from damage and stored above the ground on platforms, skids, or other supports. It shall be stored in such a manner and adequately marked to facilitate inspection and checking. When placed in the work, the reinforcing steel shall be free from dirt, detrimental scale, paint, oil or other foreign substance.

(b) Bending.

Field bending will be permitted only as provided under Section 1600. All reinforcing bars shall be bent cold and proper appliances shall be provided for such work. Bars partially embedded in concrete shall not be field bent except as shown on the Plans.

(c) Placing, Supporting, and Fastening.

All reinforcing steel shall be accurately placed and firmly held by approved supports in the position shown on the Plans. Reinforcing bars shall be securely fastened together. Reinforcement placed in any member shall be inspected and approved immediately prior to any concrete being placed. Laying or driv-

ing bars into the concrete after placement will not be permitted. All horizontal reinforcement shall be supported on metal supports or spacers as indicated on the standard plan sheets for Supports and Spacers for Reinforcing Steel. The use of small stones or concrete or wood blocks for supporting reinforcement will not be permitted. The reinforcement shall be held securely in place at the proper position and spacing as indicated on the Plans by the use of wire ties at bar intersections and tying to the supports and spacers. All wire ties in the top mat of steel shall be bent downward. The adequacy of the supports and ties to secure the reinforcement properly shall be subject to the approval of the Engineer. No welding of reinforcing steel will be permitted except as shown on the Plans.

(d) Epoxy Coated Reinforcement.

(1) Handling. In order to protect the coated reinforcement from damage, the Contractor shall use padded or non-metallic slings and padded straps. Bundled bars shall be handled in a manner which will prevent excessive sagging of bars which may damage the coating. The bundled bars shall not be dropped or dragged and must be stored on wooden cribbing. If, in the opinion of the Engineer, the coated bars have been extensively damaged, the material will be rejected. The Contractor may propose, for the approval of the Engineer, alternate precautionary measures.

(2) Fabrication and Placement. The bars shall be fabricated and placed as shown on the Plans and as specified herein. All bending should be performed around nylon coated pins or wooden mandrels. The rate of bending may have to be reduced for some bar sizes to minimize cracking or debonding of the coating. Any visible evidence of cracking or debonding of the coating in the bent area of bars bent in accordance with the Plan requirements shall be patched with approval of the Engineer, except that a hairline crack, 75 micrometers or less, at the base of the deformation will not be cause for rejection nor will patching of these cracks be required. All patching shall be done promptly after bending. Bars shall not be shipped until patching material has lost all tackiness.

On bridges where all deck steel is epoxy coated, metal bar chairs, spacer frames or other bars in contact with epoxy coated bars shall be either plastic coated or epoxy coated in its entirety.

On bridges where only the top mat and hubguard/handrail is epoxy coated, metal bar chairs or other bars in contact with

epoxy coated bars shall be plastic coated where in contact with the coated bar.

Plastic-coated tie wires approved by the Engineer shall be used in the assembly of the coated bars in the structure to protect them from physical damage.

(3) Patching. Patching material shall be applied to all sheared ends and contact areas for hangers or couplers. Patching materials shall be applied to all damaged areas at the points of occurrence, such as the initial application, fabrication, destination or installation points with the following exception. Damaged areas of coating not more than 5 millimeters across at the widest point of exposed area of bare steel and occurring no more than 20 in any meter of coated bar need not be repaired.

Areas to be patched shall be clean and free of surface contaminants. They shall be promptly treated in accordance with the resin manufacturer's recommendations and before detrimental oxidation occurs.

(e) Splicing.

Whenever it is necessary to splice reinforcement at points other than those shown on the Plans, drawings showing the location of each splice shall be submitted to the Engineer for approval before the reinforcing steel is ordered. Splices shall be avoided at points of maximum stress. They shall, where possible, be staggered, and shall be designed to develop the strength of the bar without exceeding the allowable unit bond stress. Bars shall be lapped in accordance with details shown on the Plans. Splicing of reinforcing steel by welding will be permitted only if shown on the Plans. Lapped splices in reinforcement shall not be used for bar sizes larger than 35 millimeters. Where the bar size exceeds a 35 millimeter bar, welded splices or other positive connections shall be used with the approval of the Engineer. The welding of direct butt splices shall be made in accordance with the requirements of the American Welding Society Publication "Reinforcing Steel Welding Code" AWS D12.1. A certified welder will be required.

(f) Thermal Butt Splices.

At locations shown on the Plans, reinforcing bars shall be spliced using a thermal butt splicing process as specified herein.

(1) Thermal butt splicing shall be accomplished using a standard approved, exothermic process whereby molten filler

metal, contained by a high strength steel sleeve of larger inside diameter than the bars, is introduced into the annular space between the bars and the sleeve and also between the ends of the bars. Upon cooling and hardening of the filler metal the splice shall develop, by the mechanical strength of the splice components, at least 90 percent of the minimum tensile strength of the bars spliced. A minimum tensile strength of 620 megapascals shall be used. The splice shall not depend upon fusion of the filler metal with the bars nor shall the bars be heated to their melting point, during the splicing process. The degree of heat required to effect the splice shall not decrease the structural properties of the bars nor significantly affect the original hardness of the bars. Splices shall be made using manufacturers standard jigs, clamps, ignition devices and other required accessories. The process shall be approved by the Engineer. Except as otherwise specified, splicing shall be in accordance with the manufacturer's recommendations as approved by the Engineer.

As a condition of approval, the Contractor shall make three test splices of each bar size and orientation. The test splices shall be in the same orientation as the field splices, i.e., the horizontal or vertical position. The test splices shall be tension tested to destruction by an approved laboratory and certified reports of the tests shall be submitted at the time of requesting approval. Bars shall be preheated where required by the manufacturer.

(2) Preparation of Bar Ends. Bars to be spliced by the thermal butt splicing process may be sawed, sheared or flame cut providing that ends of sheared bars are reshaped if necessary to enable bar ends to fit into the sleeve after shearing and the ends of the flame cut bars shall have all slag removed by chipping and wire brushing prior to splicing. All surfaces to be enclosed in the sleeve shall be free of burrs, paint, oil, rust, scale or other foreign material and shall be cleaned by wire brushing or other approved methods just prior to splicing.

(3) Inspection and Testing. Thermal butt splicing will be visually examined by the Engineer and all splices having visible defects determined to be injurious by the Engineer shall be removed and replaced. No splice shall be encased in concrete until approved by the Engineer.

One tension test specimen splice shall be made to represent each lot of bars spliced in the field. Unless shown otherwise on the Plans, a lot shall consist of all bars in a days run for all splices. When possible, test specimens shall be taken al-

ternately between the horizontal and vertical position. Specimens shall be made by the same operator under the same conditions as the splices they represent. Each specimen shall be tension tested to destruction or to the specified ultimate strength of 620 megapascals, whichever is less. Tests shall be made by the Contractor in a laboratory approved by the Engineer. Reports shall be promptly furnished to the Engineer. If any one test specimen fails to meet the tensile strength requirements, two production splices from the lot represented by the specimen shall be cut out and tension tested by the Contractor and should the two production splices fail, the entire lot will be rejected.

(4) Protection of Forms. Any concrete forms which may be close to welded bar splices shall be protected from the heat generated by splicing operations by protecting the affected surface of the form.

(g) Reinforcing Bar Trusses.

Bar trusses shall be placed, supported and secured in proper position before beginning the placement of the concrete. Unless the bar trusses are so designed and fabricated with outstanding legs to be in contact with the forms they shall be supported on metal supports and spacers. If the mass of the trusses cause the supporting legs of trusses to indent into the forms, bar supports shall be used as auxiliary support for the truss legs.

(h) Structural Steel Reinforcing.

When structural steel is used for reinforcing it shall meet all the requirements provided in Section 702, with the exception that it shall not be painted. All connections shall be bolted unless otherwise shown on the Plans. All holes shall be reamed or drilled and all bolts turned to a driving fit by being given a finishing cut. The threads shall be entirely outside of the holes and approved nut locks used on all bolts.

(i) Mesh Reinforcement for Structures.

Mesh reinforcement shall be of the size and spacing of bars and sheets as shown on the Plans. The sheets of mesh shall be lapped as indicated on the Plans. The method of placing the mesh and securing it in proper position shall be approved by the Engineer.

(j) Box Culvert Reinforcing.

All reinforcing steel for road culverts and reinforced concrete box bridges shall be grade 400 unless otherwise noted on the Plans.

703.04 METHOD OF MEASUREMENT.

Reinforcing steel will be measured by the kilogram, based on the theoretical number of kilograms complete in place as shown on the Plans or placed as ordered in writing by the Engineer. No allowance will be made for the clips, wire, or other fastening devices for holding the steel in place. The quantities of materials furnished and placed shall be based upon the calculated mass of the reinforcing steel actually placed in accordance with these Specifications. The mass calculated shall be based upon Table 1.

TABLE 1.

Size:	Mass per Meter in kilograms
*9mm	0.560
10mm	0.785
*12mm	0.995
15mm	1.570
20mm	2.355
*22mm	3.040
25mm	3.925
30mm	5.495
*32mm	6.405
35mm	7.850
45mm	11.775
55mm	19.625

* Non-standard SI bars

No allowance will be made for the mass of weld metal used in the fabrication of bar trusses. No separate compensation will be allowed for the cost of making thermal butt splices. The cost involved shall be considered as subsidiary to the contract item "Reinforcing Steel".

703.05 BASIS OF PAYMENT.

The amount of completed and accepted material, measured as provided above, shall be paid for at the Contract unit price per kilogram for "Reinforcing Steel," which prices shall be full compensation for furnishing, fabricating, transporting, delivering, erecting, and placing all materials, for all labor, equipment, tools, and incidentals necessary to complete the work.

SECTION 704

PILING

704.01 DESCRIPTION.

This item shall consist of untreated or treated timber, concrete or steel piles of the dimensions specified and driven to the penetration and bearing values shown on the Plans or as directed by the Engineer.

BID ITEMS
- Concrete Piles.
- Concrete Test Piles.
- Prestressed Concrete Piles.
- Steel Piles.
- Steel Test Piles.
- Untreated Timber Piles.
- Untreated Timber Test Piles.
- Treated Timber Piles.
- Treated Timber Test Piles.
- Cast Steel Pile Points.
- Steel Sheet Piles.
- Steel Sheet Test Piles.
- Piles.
- Test Piles.
- Test Piles (Special).
- Pre-Drilled Pile Holes.

704.02 MATERIALS.

The following materials shall conform to the applicable requirements of the Materials Division.

Preservative Treatments for Timber	Section 2300
Portland Cement	Section 2000
Water	Section 2400
Coarse Aggregate	Section 1100
Fine Aggregate	Section 1100
Mixed Aggregate	Section 1100
Reinforcing Steel	Section 1600
Structural Steel Piling	Section 1600
Paint and Paint Materials	Section 1800
Timber Piling	Section 2300
Steel for Sheet Piles	Section 1600
Steel Shells for Cast-in-Place Concrete Piles	Section 1600

Steel Reinforcing Bars.....Section 1600
Wire Mesh.....Section 1600
Admixtures.....Section 1400
Cast Steel Pile Points.....Section 1600

704.03 TEST PILES AND ORDER LISTS.

(a) Test Piles.

Test piles, of the number and lengths and at the locations shown on the Plans, or as otherwise ordered in writing by the Engineer, shall be driven by the Contractor to furnish information to the Engineer in determining the length of piles to be used.

Unless otherwise specified test piles shall be of the same type as is to be used for the piles for the structure.

(b) Order Lists for Piling.

The Contractor shall furnish piles in accordance with an itemized list, which shall be furnished by the Engineer, showing the number and length of all piles required.

In determining lengths of piles for ordering and for quantity to be included in the Contract, the lengths given in the order list shall be based on the lengths which are assumed to remain in the completed structure. The Contractor shall, at his own expense, increase the lengths given to provide for fresh heading and for additional length as may be necessary to suit the Contractor's method of operation.

If the Plans provide for the driving of test piles and the Contractor elects to order the piling for the structure prior to driving of the test piles, it shall be his responsibility to furnish piling of adequate lengths as determined from data obtained at the time of driving the test piles. The splicing of piles or cut-offs in excess of the ordered and accepted length, as determined by the Engineer from the test pile data, shall be at the expense of the Contractor. In case the Contractor orders all piling for the structure before the test piles are driven, the test piles shall not be underrun.

(c) Types of Piles Permitted.

The types of piles permitted will be designated on the construction layout sheet in the Plans and in the Contract.

704.04 CONSTRUCTION REQUIREMENTS.

(a) Storage and Handling of Timber Piles.

The method of storing and handling shall be such as to avoid breaking the surface of treated piles. Cant hooks, dog or pike poles shall not be used. Cuts or breaks in the surface of treated piling shall be given three brush coats of the same material used in treatment of the piles meeting the requirements shown in Section 2300.

(b) Methods of driving.

Piles may be driven with a gravity, diesel, or an air/steam hammer or a combination of predrilling or water jets and hammer. (see Division 150 for pile driving equipment)

(c) Preparation for Driving.

(1) Excavation. In general, piles shall not be driven until after the excavation is complete. Any material forced up between the piles shall be removed to correct elevation without cost to the Department before concrete for the foundation is placed.

Pre-drilled pile holes shall consist of drilling or augering pile holes of sufficient diameter to permit the pile driving to start at a lower elevation and/or to clear certain strata of material. The maximum diameter of the hole shall be limited to the pile diameter plus 75 millimeters. Pre-drilled pile holes that are required will be stipulated on the Plans. The Engineer may add additional pre-drilled pile holes in any footing when deemed necessary due to existing field conditions after excavation for the footings has been completed. When the Contractor elects to pre-drill holes, his method and limits must first be approved by the Engineer.

Pre-drilled pile holes shall be drilled or augured to an accuracy that will permit the pile to be set in its true position, and under no circumstances tilted in such a manner as to drive the pile out of position.

All pre-drilled holes shall be drilled to the depth as shown on the Plans, unless otherwise directed by the Engineer.

After the pile has been driven to final position in a pre-drilled hole, the hole shall then be filled completely with loose sand or the type of material shown on Plans. When backfilled with Class B concrete, sufficient slump shall be allowed and vibration provided when required so as to completely fill all void areas around the full length of the pile.

(2) Caps. The heads of all concrete piles, and the heads of timber piles, when the nature of the driving is such as to un-

duly injure the piles, shall be protected by caps of approved design, having a suitable cushion next to the pile head and fitting into a casting which in turn supports a timber shock block. When the area of the head of any timber pile is greater than that of the face of the hammer, a suitable cap shall be provided to distribute the blow of the hammer throughout the cross section of the pile and thus avoid, as far as possible, the tendency to split or shatter the pile.

For special types of piling, driving heads, mandrels, or other devices in accordance with the manufacturer's recommendation shall be provided so that the pile may be driven without injury.

For steel piling the heads shall be cut squarely and a helmet having grooves in its bottom to accommodate the shape of the steel pile being driven shall be provided to hold the axis of the pile in line with the axis of the hammer and to prevent damage to the pile.

For precast concrete and prestressed concrete piles, the pile head shall be plane and perpendicular to the longitudinal axis of the pile to prevent eccentric impacts from the drive head.

(3) Collars. Collars, bands, wrappings of heavy wire or other devices to protect timber piles against splitting and brooming shall be provided where necessary.

(4) Pointing. Timber piles, generally, shall not be pointed unless required by the Engineer. When shown on the Plans or ordered by the Engineer, the piles shall be shod with metal shoes of an approved design, the points of the piles being carefully shaped to secure an even and uniform bearing on the shoes.

(5) Cast Steel Pile Points. The pile points shall provide full bearing for the piles and shall be fastened to the piles by welding as shown on the contract plans. Welding shall be made by an experienced welder, acceptable to the Engineer. The pile point shall have bearing surfaces and continuous or individual cutting teeth that generally comply with the details shown on the Plans.

(d) Required Penetration and Bearing Values.

(1) Piling shall be driven to attain as a minimum the bearing value and penetration as shown on the Plans unless rock or other impervious material is encountered or unless, in the opinion of the Engineer, such bearing or penetration cannot be obtained without injury to the pile.

When satisfactory bearing cannot be obtained with lengths specified, the number of piling indicated on the Plans may be

increased with approval of the Engineer so that the maximum load on any pile shall not exceed its safe carrying capacity.

(2) Defective Piles. Pile driving procedure shall be such that crushing and spalling of the concrete, injurious splitting, splintering and brooming of the wood or deformation of the steel shall not occur. Any pile damaged by reason of internal defects, or by improper driving or by having been driven out of its proper location shall be removed and replaced by a new longer pile or, at the option of the Engineer, a second pile may be driven adjacent thereto, if this can be done without detriment to the structure. Treated timber piles shall be protected from brooming or splitting by the use of heavy wire wrappings. Care shall be taken when a hard stratum is anticipated so that the pile will not be damaged.

Piles shall be driven within 20 millimeter variation per meter of length to the vertical or battered lines indicated on the Plans, except that foundation piles more than 10.5 meters long or any piles used in bents shall be driven within 10 millimeter variation per meter of length to the vertical or battered line indicated on the Plans. The maximum variation on the head of the pile after driving from the position shown on the Plans shall be 50 millimeters for piles used in bents and 150 millimeters for foundation piles. Misaligned piles shall not be forced into proper position.

All piles pushed up by the driving of adjacent piles or by any other cause shall be redriven at the Contractor's cost to required penetration or resistance.

In case water jets are used in connection with the driving, the bearing capacity shall be determined by the above formulas from the results of driving after the jets have been withdrawn, or a load test may be applied.

(3) Formulas for Computing Bearing Values. In the absence of loading tests, the safe bearing values of piles shall be determined by the formulas in Table 1.

TABLE 1

HAMMER	Type of pile	Formula
Gravity	Timber	$P = \frac{0.11\ WH}{S+0.04}$
Gravity	Steel Shell Steel Sheet	$P = \frac{0.16\ WH}{S+0.01} \quad \frac{W}{(W+X)}$
Steam (Single Acting)	All Types	$P = \frac{0.11\ WH}{S+0.004}$
Steam (Double Acting)	All Types	$P = \frac{0.11\ E}{S+0.004}$
Delmag and McKierman-Terry *	All Types	$P = \frac{0.11\ (W)\ (H)\ (.80)}{S+\frac{0.004\ (X)}{W}}$ **
Link-Belt *	All Types	$P = \frac{0.11\ (E)\ (.80)}{S+\frac{0.004\ (X)}{W}}$ **

* Diesel Hammers

** For diesel hammers the quantity X/W shall be dropped from the formula if less than one (1).

P = safe bearing power in Newtons

W = Mass, in kilograms, of striking part of hammer

H = height of fall in meters

E = Energy of ram in joules per blow

S = the average penetration in millimeters per blow for the last five blows for gravity hammers and the last 20 blows for steam or diesel hammers

X = Mass, in kilograms of the pile plus the mass of any cap and/or anvil used on the pile during driving

The above formulas are applicable only when:

The hammer has a free fall.

The head of the pile is not broomed or crushed.

The penetration is reasonably quick and uniform.

There is no appreciable bounce after the blow.

A follower is not used.

In case water jets are used in connection with the driving, the bearing capacity shall be determined by the above formulas from the results of driving after the jets have been withdrawn, or a load test may be applied.

(e) Diesel Hammers.

The energy rating to be used to determine if any type or brand of diesel hammer is of adequate size other than those shown in Table 1, will be 80 percent of the energy rating as listed by the manufacturer regardless of the type or brand of diesel hammer to be used.

(f) Steam and/or Air Hammers.

The energy rating to be used for computing bearing values and to determine if a steam or air hammer is of adequate size

shall be 100 percent of the energy rating listed by the manufacturer. It should be kept in mind that the energy output for steam or air hammers will vary if the number of blows per minute deviates significantly from the number designated by the manufacturer.

(g) Test Pile (Special).

When the item Test Pile (Special) is shown on the Plans and Contract the Pile Driving Analyzer (PDA) will be used on the project to monitor the driving of the test pile(s) to the required driving resistance to obtain the desired ultimate loads by preliminary calculations with the Wave Equation Analysis Program (WEAP) and subsequent dynamic measurements with the PDA, following the procedures below. Once the Contractor's system has been approved no variations in the driving system will be permitted without the Engineer's written approval. Any change in the driving system will only be considered after the Contractor has submitted the necessary information for a revised wave equation analysis.

(1) Wave Equation Analysis Program (WEAP). The Contractor shall provide the Engineer with the pile driving equipment information required from the *Pile and Driving Equipment Data Sheet* located in the Contract. The Field Engineer will forward this information to the Bridge Engineer to be used in wave equation analysis of pile driving.

This information will be provided to the Field Engineer at least 14 days prior to the preconstruction conference. The Contractor will be notified of the hammer data analysis results at the Preconstruction Conference.

The pile driving equipment shall be capable of providing the minimum energy as noted on the Plans. If the analysis shows that pile damage or inability to drive the pile to the desired ultimate capacity will result from the Contractor's proposed equipment or methods, the Contractor shall have two options: (1) He will either modify his proposed methods and/or equipment, or (2) Provide additional pile cross-sectional area or alternate piling.

Subsequent analysis of the option chosen will be made by the Engineer until the results indicate that the piles can be driven to the desired ultimate capacity without damage.

These options will be provided at no increase in the contract cost.

(2) Pile Driving Analyzer. Dynamic measurements will be taken by the Engineer in charge during driving of a predeter-

mined number of test pile as shown on the Plans. It is estimated that the Engineer will need approximately 1½ hours to prepare the test piling and to install the dynamic measuring equipment. The Contractor shall provide the Engineer safe and reasonable means of access to the pile for preparation and attaching instruments after the pile is placed in the leads. Pile shall be driven in a designated footing to the required driving resistance to obtain the estimated ultimate loads. If non-axial driving is indicated by dynamic test equipment measurements, the Contractor shall immediately realign the driving system. A specified number of test pile may be retapped a minimum of 24 hours after initial driving. The retap will consist of a minimum pile penetration of 150 millimeters or 50 blows, whichever occurs first.

The Contractor will notify the Engineer in charge five working days prior to driving test piling on which dynamic testing is required to allow the Department time to mobilize and get test equipment to the field.

The Engineer will utilize the pile driving analyzer results to provide the Contractor with a blow count for production driving.

704.05 PILE CAPPING AND PAINTING.

(a) Cutting Off and Capping Piles.

(1) Timber Piles. The tops of all piling shall be sawed to a true plane, as shown on the Plans, and at the elevation fixed by the Engineer. Piles which support timber caps or grillage shall be sawed to conform to the bottom of the superimposed structure. In general, the length of pile above the elevation of cut-off shall be sufficient to permit the complete removal of all material injured by driving, but piles driven to very nearly the cut-off elevation shall be carefully adzed or otherwise freed from all broomed, splintered or otherwise injured materials.

The heads of treated piles that will be exposed to the weather shall be treated by covering the sawed surface with three applications of the same material as used in the treated pile and meeting the requirements shown in Section 2300.

Unless otherwise required on the Plans, the heads of timber piles that are to be capped shall be treated with three coats of a mixture of the same material as used in the treated pile and meeting the requirements shown in Section 2300. Additional covering such as zinc sheets, etc., shall be as required on the Plans.

(2) Steel, Steel Sheet, or Steel-Shell Piles. Piles shall be cut off at the required elevation. If capping is required, the connection shall be made according to details shown on the Plans.

(b) Painting Piling.

The exposed portion of steel piles, steel sheet piles, or the shells or castings of cast-in-place concrete piles shall be painted. Unless otherwise called for on the Plans the paint shall be applied in the field and shall consist of the same kind and total number of coats as is applied to the structural steel on the structure, or if no structural steel is to be painted, shall consist of a prime coat of inorganic silicate as required for the shop coat and a vinyl finish coat, as specified in Section 702. Paint shall be applied to the pile for a distance of 300 millimeters below the bottom of the channel, top of the embankment, natural ground or to normal low-water elevation.

704.06 SPLICING PILES.

Full length piles shall be used where practicable. Steel piling preferably shall not be spliced, but splices may be made with the permission of the Engineer or when shown on the Plans. Splices shall be made in accordance with the details shown on the Plans and by means of the metallic arc welding process as provided in Section 702.

WELDERS: Qualified welders per se will not be required for the welding of structural steel piling or shell piling. Welded splices for structural steel piling and shell piling may be made by an experienced welder, acceptable to the Engineer, however, any failure in the splice shall be corrected or replaced at the Contractor's expense.

Prestressed Concrete Piles. Extensions, splices or build-ups on concrete piles shall be avoided whenever possible, but when necessary they shall be made in accordance with the details shown on the Plans, or as approved by the Engineer.

The splicing of timber piles shall be avoided wherever possible, but when necessary the splices shall be made as follows: The added piece shall conform closely in diameter to the main pile at the point of splice. A butt joint shall be made bearing evenly over the entire surface. Either of the two following methods of splicing shall be used:

(a) A 20 millimeter steel dowel shall extend at least 300 millimeters into each piece, and four 80 millimeter by 5 millimeter steel fishplates shall be bolted across the joint equally spaced around the pile. Each fishplate shall be secured with five M24

bolts and ogee washers upon each side of the joint, the bolts being placed at least 125 millimeters from the joint, and 75 millimeters between centers.

(b) A 1.2 meter steel or wrought-iron pipe with a minimum wall thickness of three millimeters and length approximately equal to the diameter of the pile at the splice shall be centered on the splice. The pipe shall be held in position with not less than three 16 millimeter lag screws 125 millimeters long, both above and below the joint. For treated piling, the cut ends of both the head of the pile and the splice shall be given three applications of a mixture of the same material as used in the treated pile and meeting the requirements of Section 2300.

704.07 CAST-IN-PLACE CONCRETE PILES.

Cast-in-place concrete piles shall consist of steel shells driven to specified penetration and filled with concrete.

(a) Steel Shells.

Steel shells shall meet the minimum requirements of the Plans and Specifications.

The shell will be inspected after driving is completed and before any concrete is placed. Improperly driven, broken or otherwise defective shells shall be removed and replaced.

(b) Concrete.

Unless required otherwise by the Plans, Class A Concrete shall be used to fill the steel shells.

(c) Reinforcement.

Reinforcement shall be as shown on the Plans and shall be fastened together to form a rigid unit that can be lowered into the driven shell before the concrete is placed. No loose bars will be permitted. This unit shall be secured inside the shell by methods that will insure its proper location inside the shell after the concrete is placed.

(d) Concrete Placement.

Except by permission from the Engineer, concrete shall not be placed inside any shell until the driving of all shells within a radius of 4.5 meters from the pile has been completed, nor until all the piles for any one bent have been completely driven. If this cannot be done, all driving within the above limits shall be discontinued until the concrete in the last pile cast is 7 or more days old.

Accumulations of water shall be removed from the shells before concrete is placed and the concrete in the upper 4.5 meters of the shell shall be consolidated by internal vibration.

(e) Prestressed Concrete Piles.

Extensions, splices or build-ups on concrete piles shall be avoided whenever possible, but when necessary they shall be made in accordance with the details shown on the Plans, or as approved by the Engineer.

704.08 METHOD OF MEASUREMENT.

(a) Piling.

Treated timber, untreated timber, steel, steel sheet, concrete, cast-in-place concrete and prestressed concrete piles shall be measured by the meter of actual length of piles permanently placed in the structure.

The measured length for prestressed concrete piles shall be the length from the tip to the point where the concrete is cut away to provide connection with the cap or footing and shall not include the length of reinforcing steel extending beyond the pile and into the cap or footing.

(b) Test Piles.

All test piles ordered by the Engineer to be driven shall be measured by the meter of actual length of piles, ordered and accepted.

(c) Cut-offs.

Pile cut-offs shall be the difference between the total number of meters of piles ordered and accepted and the actual number of meters of piling remaining permanently in the structure.

(d) Cast Steel Pile Points.

Cast Steel pile points shall be measured per each.

(e) Pre-drilled Pile Holes.

Pre-drilled pile holes shall be measured by the meter. The length of pre-drilled pile hole to be included for measurement will be computed using the bottom of footing or abutment elevation as shown on the Plans and the bottom of pre-drilled hole elevation as determined in the field. If the Contractor's method of construction requires additional drilling, this additional drilling length shall be subsidiary.

If the Plans do not require pre-drilled pile holes and the Contractor elects to pre-drill, no payment will be made and the work will be subsidiary to other items of the Contract.

704.09 BASIS OF PAYMENT.

(a) Piling.

The amount of completed and accepted work, measured as provided above shall be paid for at the Contract unit price per meter for the various type of piles and per each for "Cast Steel Pile Points."

The amount of completed and accepted work, measured as provided above shall be paid for at the Contract unit price per meter for "Untreated Timber Piles" or "Treated Timber Piles" which are of or less than the lengths shown on the Plans; or are greater than the lengths shown on the Plans but which do not exceed 14 meters in length. An adjusted unit price as calculated from the following formula will be paid when the length of the treated or untreated piling is greater than that shown on the Plans and is also more than 14 meters.

$N = U [1 + 0.02 (L - P)]$

in which

N = Adjusted unit price
U = Unit price bid for piling
L = Length in meters of piling required
P = Plan length

(b) Cut-offs.

Pile cut-offs, measured as provided above, shall be paid for at the unit prices per meter as follows:

For Steel Pile cut-offs = 75 percent of the Contract unit price for Steel Piles.

For Prestressed Concrete Pile Cut-offs = 75 percent of the Contract unit price for Prestressed Concrete Piles.

For Cast-in-Place Concrete Pile Cut-offs = 60 percent of the Contract unit price for Concrete Piles.

For Treated Timber Pile Cut-offs = 60 percent of the Contract unit price for Treated Timber Piles.

For Untreated Timber Pile Cut-offs = 60 percent of the Contract unit price for Untreated Timber Piles.

For Steel Sheet Pile Cut-offs = 75 percent of the Contract unit price for Steel Sheet Piles.

Cut-off material deemed by the Engineer to be worth salvaging shall become the property of the Kansas Department of Transportation and shall be stored by the Contractor at an accessible location on the site of the work as selected by the En-

gineer. Material deemed by the Engineer as not being worth salvaging shall be satisfactorily disposed of by the Contractor.

(c) Pile Splices.

Payment for each splice of "Treated Timber Test Piles", "Untreated Timber Test Piles", "Treated Timber Piles" or "Untreated Timber Piles" ordered by the Engineer and not shown on the Plans shall be ten times the Contract unit price per meter of the type of timber pile spliced. Payment for each splice of "Steel Piles", "Steel Sheet Piles", "Steel Sheet Test Piles", "Concrete Piles", (cast-in-place or prestressed), "Test Pile (Special)", "Steel Test Piles" or "Concrete Test Piles" (cast-in-place or prestressed) ordered by the Engineer and not shown on the Plans shall be four times the Contract unit price per meter of the type of pile spliced.

(d) Loading Tests.

The costs of all loading tests ordered by the Engineer shall be paid for as "Extra Work", as specified in Section 104.

(e) Falsework and Defective Piles.

No payment will be made for the furnishing or driving of falsework piles, nor will payment be made for piles driven out of place, or for defective piles.

(f) Items included in Unit Prices.

The Contract unit prices for all items mentioned above shall be full compensation for furnishing, transporting, delivering, driving, and placing of all materials, for all labor, equipment, tools, and incidentals necessary to complete the work.

(g) Pre-drilled Pile Holes.

Pre-drilled Pile holes, when required by the Plans or Contract, shall be measured as provided above and paid for at the contract unit price per meter for "Pre-drilled Pile Holes", which price shall be full compensation for all drilling or augering, and for all material for filling pre-drilled holes, for all labor, tools, equipment and incidentals necessary to complete the work.

SECTION 705

PRESTRESSED CONCRETE MEMBERS

705.01 DESCRIPTION.

This item shall consist of the manufacturing, curing and handling of prestressed, pretensioned concrete bridge beams, panels and concrete piling of the dimensions specified on the Plans or as directed by the Engineer.

BID ITEMS
Prestressed Concrete Beams.
Prestressed Concrete Panels.

705.02 MATERIALS.

The following materials shall conform to the applicable requirements of the Materials Division.

Portland Cement	Section 2000
Water	Section 2400
Coarse Aggregate	Section 1100
Fine Aggregate	Section 1100
Mixed Aggregate	Section 1100
Reinforcing Steel	Section 1600
High Strength Steel for Prestressed Concrete	Section 1600
Steel Strand	Section 1600
Wire Mesh	Section 1600
Admixtures	Section 1400

705.03 MANUFACTURE OF CONCRETE BRIDGE BEAMS, PILING AND PANELS.

(a) Concrete.

The concrete used to manufacture the units shall consist of a mixture of 50 percent coarse aggregate and 50 percent fine aggregate by mass, Portland cement, air entraining agent and water. The use of calcium chloride is specifically prohibited and no other additives shall be used except by written permission from the Engineer. If such materials are added to the mix they shall meet the requirements of the Specifications.

Unless shown otherwise on the Plans, Portland cement used to manufacture the units may be Type I, Type IP or Type I(PM), Type II, or Type III cement for piling, and also for beams if they are to be covered by a reinforced concrete wearing surface.

The producer shall be responsible for the design of the concrete mix including the proportions of water, cement and ag-

gregates within the limits of this Specification. The producer's design mix shall be submitted to the Engineer for approval prior to casting the units.

TABLE 1
CONCRETE REQUIREMENTS

Concrete Type	Maximum Slump	Cement. Kg. Per Cubic Meter Min.	Cement. Kg. Per Cubic Meter Max.	Mixing Water Maximum Kg. Per Kg. of Cement	% Air Content
Air Entrained	100 mm	357	446	0.44	6+/−2
Non-Air Entrained *	100 mm	357	446	0.49	

* NOTE: Non-air entrained concrete may be used in concrete piling not subject to freezing and thawing and wetting and drying.

At the option of the Contractor, fly ash from an approved source and meeting the following requirements may be used as a partial replacement for Portland cement. The source and type of fly ash and cement shall not be changed for a project.

COMPOSITION: The amount of cement that may be replaced with fly ash shall not exceed 15 percent of the minimum kilograms of cement per cubic meter listed in Table 1.

Fly ash may be substituted for the displaced cement at a rate of 1.0 to 1.5 kilograms of fly ash to 1 kilogram of cement.

When fly ash modified concrete is furnished, the kilograms of water per kilogram of cement plus fly ash or kilograms of water per kilogram of blended cement shall not exceed the values specified for kilograms of water per kilogram of cement listed as maximum in Table 1.

Fly ash will not be permitted as a partial replacement for cement if Type IP, I(PM) or Type III cement is furnished.

The consistency of the concrete shall be determined by the standard slump test. The producer shall designate the slump desired at the point of delivery. The tolerance of the designated slump shall be plus or minus 20 millimeters except that the slump may not exceed 100 millimeters.

Unless shown otherwise on the Plans the concrete shall have the compressive strengths listed in Table 2. All cylinders shall be cast from the concrete used to manufacture the units. The stress application strength shall be determined by tests conducted on cylinders cured in the same manner as the units. Twenty-eight day cylinder strengths shall be determined by tests conducted on cylinders cured in the same manner as the units until the stress application strength is reached after which they shall be transported to a Department of Transpor-

tation Laboratory for curing and testing in the standard manner.

TABLE 2
COMPRESSIVE STRENGTH OF CONCRETE

Type of Unit	For Stress Application (Detensioning) and/or moving *	Age 28 Days
Prestressed Bridge Beams	30 mPa (Min.)	35 mPa (Min.)
Prestressed Piles	25 mPa (Min.)	35 mPa (Min.)
Prestressed Panels	30 mPa (Min.)	35 mPa (Min.)

* From casting bed to producer's storage only.

(b) Manufacturing Requirements.

The concrete units shall be within the tolerances specified in Table 3 of this Specification unless shown otherwise on the Contract Plans.

(1) Equipment.

(1.1) Concrete Mixers. Concrete may be mixed in truck mixers or in a central mixing plant subject to the requirements of Division 402 of these Specifications. However, when concrete is mixed in a central mixing plant and cannot be adequately mixed in accordance with Division 400, the producer shall conduct tests, as required by the Engineer, to determine the minimum mixing time to achieve uniformity of the concrete mixture.

For air-entrained concrete the maximum mixing time shall not exceed the mixing time established by uniformity tests by more than 60 seconds.

(1.2) Casting Beds. The supporting foundations for casting beds shall be such that no settlement will occur during the casting and curing of the units. Portable casting beds for prestressed concrete units will not be permitted.

(1.3) Forms. Forms shall be true to line and shall be mortar tight and shall provide access for placement of the reinforcement and the concrete.

(1.4) Stressing Jacks. Jacks for stress application shall be equipped with hydraulic gauges or other approved stress measuring devices to be used as a check against the applied load as measured by elongation.

(1.5) Curing Enclosures. Steam curing enclosures shall be reasonably free from steam leakage and shall be constructed to insure adequate circulation of steam. Steam jets shall be so arranged that the steam will not play directly on the forms or the concrete as it enters the enclosure. If non-waterproof tar-

paulins are used for the enclosure, a minimum of two layers shall be used. Only waterproof tarpaulins or plastic sheeting shall be used for enclosures when prestressed concrete units are cured by radiant heat.

(1.6) Instruments. Instruments for measuring and recording temperature and humidity during the curing period, when accelerated curing is used, shall be installed inside curing enclosures for each 60 meters of casting bed. Not less than two such installations shall be provided for each enclosure. Humidity level indicators may be waived at the option of the Engineer.

(2) Placing of Reinforcement.

(2.1) Reinforcing bars shall be placed as shown on the Plans and shall be rigidly secured to prevent movement during placement of the concrete. Welding of reinforcing steel cages will not be permitted.

(2.2) Steel strand shall be accurately positioned within the tolerances specified on the Plans and rigidly secured so that it will be retained in the locations shown on the Plans. The center of gravity of the strands and the maximum loss of stress due to friction will be shown on the Plans or furnished on request. The minimum horizontal spacing center to center of strands at the ends shall be 50 millimeters. Where necessary, supports shall be installed to prevent dead load sag. Strand supports at each deflection point shall be as shown on the Plans and shall consist of a device with freely turning rollers not less than 22 millimeters in diameter except that a yoke type device may be used for top depressing of strands when approved by the Engineer. The prestress force and center of gravity shall be as shown on the Plans.

(2.3) Welded wire fabric shall be placed as shown on the Plans.

(3) Approval of Equipment and Methods.

(3.1) Not less than two weeks before starting the manufacture of prestressed concrete units, other than piling, the Contractor or producer shall submit two copies of shop drawings for initial review and seven copies (maximum 560 × 915 millimeters) for final approval and distribution unless more copies are requested, including information covering the following items. These shop drawings shall be approved by the Engineer before any fabrication is begun under the Contract.

(3.1.1) The method of forming, placing and securing the reinforcement.

(3.1.2) The plan for prestressing the units, including the type, number, size and location of the prestressing elements.

(3.1.3) The method of detensioning units with draped strands.

(3.1.4) Descriptions and allowable loads for hardware items (e.g. hold down devices, threaded inserts, etc.).

(3.1.5) The proposed concrete mix, including the slump desired at point of delivery and sources of materials.

(3.1.6) The shop drawings should also include the casting length center to center of bearings and the calculated prestress shortening.

The Engineer shall be notified sufficiently in advance of the date when casting of the units will begin to afford an opportunity for inspection of the casting beds, the forms, the placement and tensioning of the strands or tendons, equipment for proportioning, mixing, placing and consolidation of the concrete and the equipment for handling the units. Beams and panels shall not be cast prior to receipt of approved shop plans.

(4) Handling and Placing Concrete.

(4.1) General. The concrete shall be handled and placed by methods that will insure a dense, uniform product that is free from sand streaks and honeycomb areas. Concrete shall be delivered to the site of the work and discharge shall be completed within the time limits specified in Division 400. Successive batches shall be uniform in consistency and shall be placed before the preceding batch has perceptibly hardened or dried. In no case shall the interval between successive batches in a unit exceed thirty minutes. Water shall not be added to temper deposited concrete.

(4.2) Concrete Placement in Cold Weather. Concrete placement in cold weather shall be in accordance with subsection 402.07 (b) and the following.

The forms shall be preheated to approximately the same temperature as the concrete and, if necessary heating of the forms shall continue during the placement and finishing of the concrete.

(5) Surface Finish.

All surfaces of the units shall be reasonably straight and true to lines and grades and shall be free from fins or other objectionable projections. Form joint marks will be permitted. Top surfaces of beams shall be given a wire brush or stiff broom finish applied transverse to the length of the beam. Top surfaces of panels shall be raked making depressions of approximately five millimeters. The fabricator must use care with the rake to prevent pull out of the coarse aggregate.

(6) Cracks.

Concrete units shall be free from cracks of sufficient width to impair their strength and durability.

(7) Curing.

Curing may be accomplished by either the moist curing method or accelerated curing with low pressure steam or radiant heat.

(7.1) Moist Curing Method. Under normal curing temperatures the following shall apply: As soon as possible after the units have been cast they shall be covered with not less than two layers of burlap which shall be kept wet until the side forms are removed. After the side forms are removed, the units shall be protected with wet burlap or a vapor proof cover until they have attained the strength requirement for detensioning as shown in Table 2.

In case it is necessary to remove the protective covering to point up honeycomb areas or to give the units a surface finish, the surfaces of the unit shall be kept moist during the entire time that the unit is uncovered.

(7.2) Accelerated Curing with Low Pressure Steam or Radiant Heat. Low pressure steam curing or radiant heat curing shall be done under a suitable enclosure to contain the live steam or the heat. The concrete shall be allowed to attain its initial set before application of the steam or the heat. The initial application of steam or heat shall be from two to four hours after the final placement of concrete to allow the initial set of the concrete to take place. If retarders are used, the waiting period before application of the steam or radiant heat shall be increased from four to six hours. The time of initial set may be determined by the standard method of test for "Time of Setting of Concrete Mixtures by Penetration Resistance", ASTM Designation C403, and the time limits described above may then be waived.

During the waiting period, the temperature within the curing chamber shall not be less than 10° C and live steam or radiant heat may be used to maintain the curing chamber at the proper minimum temperature.

During the initial application of live steam or of radiant heat, the ambient air temperature within the curing enclosure shall increase at an average rate not exceeding 4° C per hour until the curing temperature is reached. The maximum curing temperature within the enclosure shall not exceed 71° C. The maximum temperature shall be held until the concrete has reached the desired strength. Detensioning shall be accomplished immediately after the steam or heat curing has been discontinued. Additional curing is not required after detensioning.

Recording thermometers showing the time-temperature relationship throughout the curing period from placing concrete

to transfer of prestress shall be provided. At least one recording thermometer per 60 meters of product shall be used. All temperature records shall be retained by the Engineer as part of the curing records.

(7.2.1) Curing with Low Pressure Steam. Application of live steam shall not be directed on the concrete forms as to cause localized high temperatures.

(7.2.2) Curing with Radiant Heat. Radiant heat may be applied by means of pipes circulating steam, hot oil or hot water, or by electric heating elements. Radiant heat curing shall be done under a suitable waterproof enclosure to contain the heat and moisture. Moisture loss shall be minimized by covering all exposed concrete surfaces with two layers of wet burlap.

The temperature of the concrete shall not be allowed to drop below 10° C at any time. Temperature limits and use of recording thermometers shall be similar to curing with steam. Due to the slow rise of ambient temperatures with radiant heat, application of heat cycles may be accelerated to meet climatic conditions. In all cases, the curing procedure to be used should be well established and carefully controlled.

(8) Detensioning Prestressed Units with Draped Strands.

Units may be detensioned as soon as they have attained the strength requirements shown in Table 2. If the units have been cured by accelerated curing methods they shall be detensioned as soon as possible after the stress application strength of the concrete has been reached and while the concrete is still warm.

(c) Inspection and Testing.

(1) General.

The Engineer or his representative shall have free access to the manufacturing plant at all times for the purpose of inspecting materials, plant facilities and manufacturing and curing procedures. The manufacturer shall inform the Engineer of his planned concrete placement and curing schedule in advance of the start of any work to afford time for the testing of materials, the inspection of equipment and reviewing of procedures that will be used in casting units.

(2) Testing Equipment.

(2.1) Cylinder Molds. The manufacturer shall furnish an ample supply of metal cylinder molds for the casting of test cylinders. Other types of molds will be permitted when the moist curing method is followed. All molds shall be subject to the approval of the Engineer.

(2.2) Compression Machine. The manufacturer shall furnish a machine capable of measuring the compressive strengths of

concrete cylinders cast during the manufacturing of the units. All testing machines used to determine the stress release time for the units shall be calibrated and are to be approved by the Engineer.

(3) Test Cylinders.

(3.1) Casting and Curing. All test cylinders shall be made by the Engineer or his representative and cured under the same conditions as the concrete they represent except as specified in subsection 705.03(a). Not less than one group of test cylinders shall be made for each 30 cubic meters of concrete or fraction thereof placed in each line within each curing enclosure during a continuous working period.

A group of cylinders will consist of three sets of three cylinders each which shall be tested as follows:

Set No. 1 will be tested prior to strand release to determine if the specified "stress application and/or moving strength" has been reached (see Table 2).

Set No. 2 will be tested to determine if the specified 28 day strength has been reached (see Table 2). This set will be tested whenever the producer believes that the specified 28 day strength has been reached.

Set No. 3 will be tested when the concrete has reached an actual age of 28 days.

(3.2) Testing. Cylinders tested to measure the stress application strength shall be tested at the producer's plant. Cylinders tested to determine the 28 day compressive strength will be tested in the Department of Transportation Materials and Research Center.

(3.3) Strength Tolerance. The specified 28 day compressive strength must be attained before final acceptance of the product with the exception that in any ten consecutively manufactured cylinder sets, one set may have compressive strengths not more than five percent below the specified minimum strength. When more than one of any ten consecutively manufactured cylinder sets attains compressive strengths below the minimum specified strengths, the producer may core the unit represented by such cylinders and request that they be tested. The location of the core shall be approved by the Engineer. If the compressive strengths of the cores are below the specified minimum compressive strength, the units cast from the concrete shall be rejected.

(d) Handling, Storage and Transportation.

(1) Handling.

The units shall not be lifted or strained in any way before the stress application strength has developed. While lifting

and handling, the units shall be supported only at points designated on the Plans.

(2) Storage.

When units are stacked for storage, each unit shall be supported at designated bearing points.

(3) Transportation.

The units may be shipped one day after detensioning provided test cylinders have reached the specified 28 day compressive strength and have attained a minimum age of five days. Beams shall be supported in an upright position. The points of support and direction of reactions with respect to the beam shall be approximately the same during transportation as when the beam is in its final position in the structure. Piling and panels shall be transported with the points of support approximately below the lifting points designated on the Plans.

If, during transportation, units are supported at points so that a portion of the unit is cantilevered past the points designated above, the unit must be adequately reinforced or the overhanging portion adequately supported to prevent damage.

(4) Damage.

Units damaged in shipment or placement may be accepted provided the damage does not impair the structural qualities of the unit and such damage can be repaired at the work site to the satisfaction of the Engineer.

(e) Field Construction.

The concrete wearing surface shall not be placed on prestressed bridge beam units until they have reached a minimum age of 28 days or as noted on the Plans.

TABLE 3
DIMENSIONAL TOLERANCES

Units shall be manufactured within the following tolerances unless shown otherwise on the Contract Plans.

Double Tee Beam

Length: ± 12 mm.
Width (overall): ± 6 mm.
Depth: ± 6 mm.
Stem Thickness: ± 3 mm.
Flange Thickness: + 6 mm., – 3 mm.
Position of Block-out: ± 12 mm.
Horizontal alignment (deviation from straight line parallel to centerline of member):
6 mm. up to 12 m. lengths.
10 mm. 12 m. to 18 m. lengths.
12 mm. greater than 18 m. lengths.
Camber deviation from design camber: ± 2 mm. per meter but not greater than 20 mm.
Differential camber between adjacent members of the same design: 2 mm. per meter but not greater than 20 mm.
Tendon Position: ± 6 mm. in c.g. of strand group.
Tolerance between tendons: ± 3 mm.
Position of handling devices: ± 150 mm.
Position of deflection points for deflected strands: ± 150 mm.
Stem to edge of top flange: ± 3 mm.
Distance between stems: ± 3 mm.
Position of weld plates: ± 25 mm.
Squareness of ends (vertical and horizontal alignment): ± 6 mm.
Stirrup bar spacing (individual or accumulative): ± 25 mm.
Stirrup bar height: ± 12 mm.

Single Tee Beam

Length: ± 20 mm.
Width (overall): + 10 mm., – 6 mm.
Depth: ± 6 mm.
Width (stem): + 10 mm., – 6 mm.
Thickness (flanges and fillets): + 6 mm., – 3 mm.
Position of block-outs: ± 12 mm.
Side Inserts (ctr. to ctr. and ctr. to end): ± 12 mm.
Bearing area deviation from plane: ± 3 mm.
Bearing plate (ctr. to end of beam): ± 6 mm.
Horizontal alignment (deviation from straight line parallel to centerline to member):
6 mm. up to 12 m. lengths.
10 mm. 12 m. to 18 m. lengths.
12 mm. greater than 18 m. lengths.
Camber deviation from design camber:
± 2 mm. per meter but not greater than ± 20 mm.
Camber deviation between adjacent beams:
2 mm. per meter but not greater than 20 mm.
Tendon Position: ± 6 mm. in c.g. of strand group
Tolerance between tendons: ± 3 mm.
Position of handling devices: ± 150 mm.

Position of deflection point for deflected strands: ± 150 mm.
Position of weld plates: ± 25 mm.
Squareness of ends (vertical and horizontal alignment): ± 12 mm.
Stirrup bar spacing (individual or accumulative): ± 25 mm.
Stirrup bar height: ± 12 mm.

Bridge I-Beam

Length: ± 20 mm.
Width (flanges and fillets): + 10 mm., – 6 mm.
Depth (overall): + 12 mm., – 6 mm.
Width (web): + 10 mm., – 6 mm.
Depth (flanges and fillets): ± 6 mm.
Bearing Plates (ctr. to ctr.): ± 1 mm. per meter but not greater than ± 20 mm.
Horizontal alignment (deviation from straight line parallel to centerline of member): 1 mm. per meter of span but not greater than 25 mm.
Camber deviation from design camber: ± 1 mm. per meter of span but not greater than ± 12 mm.
Camber deviation between adjacent members: 25 mm. maximum
Stirrup bars (projection above top of beam): ± 20 mm.
Tendon positions: ± 6 mm. c.g. of strand group
Tolerance between tendons: ± 3 mm.
Position of deflection points for deflected strands: ± 150 mm.
Position of handling devices: ± 150 mm.
Bearing plates (ctr. to end of beam): ± 6 mm.
Side inserts (ctr. to ctr. and ctr. to end): ± 12 mm.
Exposed beam ends (deviation from square or designated skew):
Horizontal: ± 6 mm.
Vertical: ± 10 mm. per meter of beam depth
Bearing area deviation from plane: ± 3 mm.
Stirrup bar spacing (individual or accumulative): ± 25 mm.
Stirrup bar height: ± 20 mm.
Position of post-tensioning duct: ± 6 mm.
Position of weld plates: ± 25 mm.

Prestressed Pile

Length: ± 25 mm.
Width or diameter: – 6 mm., + 10 mm.
Head out of square: 10 mm. per meter of width
Horizontal alignment (deviation from straight line parallel to centerline of pile): 1 mm. per meter of pile
Position of void: ± 6 mm.
Position of stirrup bars and spirals: ± 20 mm.
Position of tendons: ± 6 mm.
Position of handling devices: ± 150 mm.
Position of steel driving tips: 12 mm.

Prestressed Panels

Length: ± 6 mm.
Width: ± 6 mm.
Thickness: + 6 mm., – 3 mm.
Square Ends (deviation from square): ± 6 mm.
Deviation from straightness of mating edge: + 3 mm.
Position of strands: ± 3 mm. vertical, ± 12 mm. horizontal.

705.04 METHOD OF MEASUREMENT

Prestressed concrete beams will be measured per meter of each type beam complete in place. The pay length will be the length as shown on the Plans. No measurement will be made of the various items involved in the beams. Piling, bearing devices, structural steel and concrete in the deck of the superstructure, including curbs, handrails and diaphragms, except prestressed beams will be measured and paid for separately in accordance with the Standard Specifications and as provided on the Plans. Prestressed concrete panels will be measured per square meter complete in place.

705.05 BASIS OF PAYMENT

The amount of completed and accepted work, measured as provided above, will be paid for at the Contract unit price per meter for the various types and sizes for "Prestressed Concrete Beams", and at the price per square meter for "Prestressed Concrete Panels", which price will be full compensation for furnishing, hauling and placing all materials required for fabricating and erecting the beams and panels including concrete, reinforcing steel, reinforcing tendons, anchorages, grout, ducts or conduits, tie rods and other miscellaneous items required as shown on the Plans, and for all labor, equipment, tools and incidentals necessary to complete the work.

SECTION 706

DRILLED SHAFTS

706.01 DESCRIPTION.

Drilled shafts shall consist of reinforced concrete placed in an uncased shaft or a steel casing and founded in the formation as shown on the Plans.

Drilled shafts shall be constructed as shown on the Plans for any special condition that requires construction methods different from the general methods covered in this Specification.

The estimated lengths of drilled shafts shown on the Plans are based on estimated top of formation elevation determined from the borings. The actual length of drilled shafts to be installed will be determined by the Engineer as the work progresses and will be based on the actual condition found at each shaft. The minimum socket length shown on the Plans will be required. Over excavation or additional penetration of the steel casing will be the Contractor's responsibility and shall be subsidiary to the plan pay length.

BID ITEMS:
Drilled Shaft (*).
Rock Cores.
Permanent Casing (*).
* size

706.02 MATERIALS

(a) The casing shall be of sufficient thickness to carry the working stresses and loads imposed on the casing by the Contractor's method of construction. The permanent casing shall be not more than 25 millimeters out of round. Deviation from a chord from end to end of a permanent casing shall not be greater than 50 millimeters. Casing shall be fabricated in the shop in approved lengths suitable for shipping and handling. Shop welding shall be by the fully automatic welding process to fully develop the casing strength. Field welds shall be sufficient to develop adequate casing strength to fit the Contractor's method of construction. All welding shall be by certified welders. Inspection of welds will be visual only.

Corrugated metal pipe may be used as a permanent casing if used with a temporary steel casing unless otherwise stated on the Plans.

(b) With the exception as noted below, concrete, as specified on the Plans, shall conform to the requirements of Section 402. Concrete for a wet pour and the casing method of construction when the casing is to be pulled at the time of concrete placement, shall be the same class of concrete as specified on the Plans with a minimum of 10 percent additional cement and a slump of approximately 150 millimeters.

(c) Reinforcing Steel shall conform to the requirements of Section 703 and shall be grade 400 unless otherwise specified on the Plans.

706.03 CONSTRUCTION METHODS.

(a) Site Preparation.

All excavation of the foundations in which drilled shafts are to be constructed should generally be completed before shaft construction begins.

(b) Uncased Method.

This method may be used at locations where the excavated shaft is expected to be stable and no caving soil or excess water flow is anticipated. If the Contractor chooses to use the uncased method, and the actual condition indicates that the excavation is subject to caving or excess water flow the Contractor shall be required to use the casing method. Measurement and payment for casing shall be in accordance with Sections 706.06 and 706.07.

The excavation shall be made by any practicable means without the use of water or drilling mud. Unless rock or obstructions are encountered, the excavation shall be completed in a continuous operation and the concrete shall be placed without undue delay.

When in the shaft inspection is required by the Engineer a temporary casing shall be provided.

(c) Casing Method.

The Contractor shall use the casing method when specified on the Plans or where caving conditions are encountered or where excess water begins to flow into the excavation. Unless otherwise specified on the Plans, the Contractor has the option of providing either a temporary and/or a permanent casing to prevent earth and/or water from flowing into the excavation. If the Contractor elects to use the permanent casing option, no payment will be made for the casing left in place as outlined in

706.07. The Contractor may advance the excavation by stabilizing the hole by use of a fluid of the appropriate density, however no drilling fluid will be allowed in the rock socket at any time. The Contractor shall attempt to seal the casing in a formation so as not to admit fluid or earth. If water continues to flow into the excavation, the Contractor, if directed by the Engineer, shall lower the casing deeper into the formation. If the bottom of the casing is in the formation and water continues to flow into the excavation and it is apparent that lowering the bottom of the casing will not limit water as defined in the dry pour method from flowing into the excavation or other methods will not seal the excavation, the Wet Pour Method shall be used.

(1) Dry Pour Method. A dry pour is defined as a drilled shaft where the Contractor can reduce the inflow of water to meet both of the following conditions:

(1.1) Inflow of water will not fill the hole more than 100 millimeters in depth in a five minute period, and;

(1.2) The shaft can be dewatered with a 50 millimeter pump and no more than 50 millimeters of water will be in the hole when concrete is placed.

Just prior to placing the concrete the Contractor shall use an appropriate means to clean the bottom of the excavation.

Unless otherwise specified on the Plans or directed by the Engineer, the Contractor may withdraw the temporary casing as the shaft is being filled with concrete without the use of a permanent casing. He shall maintain an adequate head of concrete to balance outside soil pressure above the bottom of the casing at all times during withdrawal. The concrete and casing must have characteristics so that the concrete in the column will not move upward as the casing is pulled. Precautions should be taken to assure that the fluid trapped behind the casing does not flow into the excavation during the upward movement of the casing. The hydrostatic pressure in the concrete column at the bottom of the casing should be sufficient to drive the column of fluid upward and the withdrawal rate of the casing must enhance the possibility of expelling all the fluid from the excavation. The casing shall be pulled before the slump decreases below 125 millimeters as determined by testing.

As an alternate to the 125 millimeter slump control method the Contractor shall begin removal of the casing within 30 minutes once the concrete reaches the bottom of the casing. While maintaining adequate hydrostatic pressure the casing shall

continue to be pulled so that no concrete is left inside the casing for more than one hour. If the Contractor is unable to remove the casing or cannot withdraw the casing within these limits, the casing shall be left in place with no increase in compensation.

(2) Wet Pour Method. The Contractor shall place a wet pour (concrete placed under water) if he cannot prevent the flow of water into the shaft as defined in the Dry Pour Method. At the time a wet pour is made the water level in the shaft shall be static and at river level or higher to prevent flow into the shaft. A method of inspection shall be provided for by the Contractor. A wet pour shall be placed by the tremie method or by pump after the shaft and rock socket are determined to be acceptable by the Engineer. A tremie shall consist of a watertight tube having a diameter of not less than 250 millimeters with a hopper at the top. When a batch is dumped into the hopper, the flow of concrete shall be induced by slightly raising the discharge end, always keeping it in the deposited concrete.

Concrete pump discharge tubes and tremie tubes used to deposit concrete under water shall be non-aluminum and shall be equipped with a device that will prevent water from entering the tube while charging the tube with concrete. Such tubes shall be supported so as to permit free movement of the discharge end over the entire top surface of the work and to permit rapid lowering, when necessary to retard or stop the flow of concrete. The tubes shall be filled by a method that will prevent washing of the concrete. The discharge end shall be completely submerged in concrete at all times and the tube shall contain sufficient concrete to prevent water entry.

The flow shall be continuous until the work is completed and the resulting concrete seal shall be monolithic and homogeneous. The wet pour shall be placed in one continuous pour from the bottom of the socket upward until the shaft is filled to the plan elevation and all water and unsound concrete has been removed.

A water tight permanent casing will be required when the wet method of construction is used.

706.04 CONSTRUCTION REQUIREMENTS

(a) Placing Drilled Shaft Casing.

When requested by the Engineer the Contractor shall furnish an outline of his proposed method of placing the shaft casing(s), including therewith computations of critical stresses im-

posed on the casing at any stage of construction. Casings shall be placed in a manner which will avoid excess stresses or damage to the casing.

The top of the shaft shall be located within 50 millimeters of the Plan location.

Unless otherwise shown on the Plans, all shafts shall be bored plumb to within a tolerance of eight millimeters per meter of length of shaft not to exceed 150 millimeters and shall have a reasonably flat bottom.

The casing shall be installed in such a manner that a minimum of voids will exist between the overburden and the casing.

No work shall be performed in the area of a drilled shaft that might damage the shaft.

If a temporary casing is used in conjunction with a permanent casing the temporary casing will not be pulled for 72 hours after completion of the concrete placement.

Excavation shall not begin for closely spaced drilled shafts (three meters centerline to centerline or less) and those occurring in unstable stratum until after adjacent holes are filled with concrete and allowed to set for 72 hours after completion of the concrete placement.

The Contractor may reduce these times if a beam test is conducted and the concrete has attained a flexural strength test of 2 megapascals as determined by the third point loading test, when cured as nearly as practicable in the same manner as the concrete it represents.

(b) Excavating Drilled Shaft Casings.

Excavation shall be made by hand, with a power driven rig, with an air lift, or other type of equipment or other combination of methods acceptable to the Engineer.

After removal of the overburden the excavation below the top of rock shall then be completed as an uncased bore (rock socket) of the diameter shown on the Plans.

In unstable soil the rock socket shall not be excavated until the casing is seated in the rock so as to prevent overburden from flowing into the socket. The method of excavation of the rock socket will be left to the Contractor's discretion with the Engineer's approval, however it shall be along the axis of the shaft. Overbreakage at the formation surface shall be avoided as much as possible so as not to impair sealing the flow of overburden into the shaft.

The rock excavation shall be cylindrical to the depth shown on the Plans. Rock projections must not interfere with placing the reinforcing steel cage.

Excavation shall be such that all overburden, rock fragments, and other material shall be removed from the shaft and rock socket leaving the inside surface clean and free of extraneous material prior to placing concrete. The proper and approved disposal of excavated material shall be the responsibility of the Contractor.

(c) Inspection and Access.

At all times when any person is in the drilled shaft excavation, provision shall be made for pumping fresh air to the person. Electric lighting shall be provided. Any mechanical equipment used inside the excavation shall be operated by air or electricity. The use of gasoline engines or other types of equipment producing fumes, will not be permitted. Suitable access into each shaft excavation shall be provided for workers and for the Engineer's Inspectors.

Facilities and equipment as necessary shall be provided which will permit the Engineer to make inspections as the work progresses. The steel casing(s) shall be inspected and any casing(s) that shows bends or other deformations which, in the opinion of the Engineer are objectionable, shall be either removed and replaced or repaired by the Contractor to the satisfaction of the Engineer. The Contractor will not be reimbursed for repairing or replacing any such damaged casing(s) ordered to be corrected by the Engineer.

The Engineer will also inspect and determine to his satisfaction that each shaft is properly located and aligned, that the rock socket is properly excavated, and that construction of the shaft conforms to the Plans and Specifications in all respects. Each shaft will be inspected immediately prior to depositing concrete and no concrete shall be placed until the Engineer's approval has been obtained.

(d) Placing Drilled Shaft Concrete.

The reinforcing steel cage shall be completely assembled and placed as a unit for the full length of the shaft prior to placing any concrete, including wet pour concrete. Care in the installation of reinforcing steel shall be employed so as to fix the steel within reasonable tolerances of the position shown on the Plans by some positive method of support. Centering shall be provided to assure that the reinforcing cage is held

in proper position while concrete is placed. If the shaft is deepened and additional reinforcing steel cage is required, the splice shall be made at the bottom of the steel cage.

Where wet pour concrete is placed in the shafts, such concrete shall be placed by tremie pipe or pump as shown in the wet pour method. Other concrete may be deposited in accordance with subsection 701.03 (e) by the use of closed chutes or pipe with a maximum 1.5 meter drop. The tremie or pump shall be centered over the shaft. During the dry pour, sufficient numbers of vibrators shall be operated in the top three meters while concrete is being placed. Vibrators will not be required for 150 millimeter slump concrete. If in the Engineer's opinion, air is being trapped in the concrete, the Contractor will be required to immediately correct this situation.

When requested by the Engineer the concrete placement method selected by the Contractor shall be submitted for approval along with sufficient details and data to review the procedure. It is imperative that the concrete in the shaft be placed continuously without joints, voids, or soil inclusions, on a sound rock formation. At any stage of the concrete operations the Department reserves the right to make corings, soundings, or other tests to determine the quality of the concrete in place. Core holes shall be drilled by the Contractor at locations and depths specified by the Engineer and may extend completely through the shaft to the bottom of the rock socket. Holes shall be drilled to recover an NX size (54 millimeter) core. The core samples recovered shall be furnished to the Engineer, labeled as to the location from which taken.

The Contractor shall cooperate with the testing procedure by providing the necessary platforms, power equipment, lights, hoist, dewatering if necessary, safety equipment, and other related incidental items.

All core holes shall be filled with grout. All grout used for filling of core holes shall be one part cement to one part sand by volume. No separate payment will be made for grout and grouting. The cost involved shall be considered as subsidiary to the item "Drilled Shafts".

Defective materials and construction shall be replaced or reconstructed as required by the Engineer at no expense to the Department. The cost of coring, soundings or testing will be paid for by the Department if the concrete proves to be sound; if defective, all such costs shall be paid for by the Contractor. Core holes of sound concrete shall be paid for at the set rate per meter for "Rock Cores". Any additional core holes required

to perform grouting of unsound concrete will be at the Contractor's expense.

Curing of the exposed surface of the shaft shall be in accordance with subsection 701.03(h) except liquid membrane-forming compounds shall not be used.

706.05 BACKFILLING.

When a temporary casing and a permanent casing is used, the space between them shall be backfilled unless otherwise noted on the Plans. The backfill material shall be free flowing granular material. The maximum size shall be six millimeter diameter but less than the minimum dimension between the temporary casing and the permanent casing. The granular material shall be approved by the Engineer. The granular material shall be placed so the void between the temporary casing and the permanent casing is completely filled. The placement of the backfill material and the pulling of the temporary casing may be done in stages as long as the bottom of the casing remains below the top of the backfill material at all times. The top 600 millimeters of this space shall be backfilled with the same top soil that was removed during excavation of the drilled shaft.

706.06 METHOD OF MEASUREMENT.

The length of drilled shafts to be included for payment will be computed to the nearest 0.01 meter using the top of shaft elevation shown on the Plans and the bottom of rock socket elevation as determined from the actual elevations given in writing by the Engineer as the work progresses at each shaft. If the Contractor's method of construction requires additional length to obtain the minimum socket length this additional length shall be subsidiary.

Permanent casings will not be measured for payment when the Plans indicate the casing is to be left in place or when the Contractor does not meet the time limits shown in the Dry Pour Method. In other situations, permanent casing will be measured for payment on a meter basis, to the nearest 0.01 meter.

Rock cores will be measured for payment on a meter basis to the nearest 0.01 meter. Measurement will be made of the concrete core which is satisfactorily recovered from sound concrete and furnished to the Engineer.

706.07 BASIS OF PAYMENT.

The length of completed and accepted drilled shaft, measured as provided above, will be paid for at the Contract unit price per meter for "Drilled Shafts", which price shall be full compensation for all costs of drilling, excavating, dewatering, driving and seating of casing; of steel casings when applicable, including reinforcing steel, concrete, wet pour concrete, splicing reinforcing extending above the top of the drilled shaft, backfilling where required by the Plans and incidental work and materials necessary to satisfactorily found and construct the drilled shaft according to the Plans and this Specification.

Permanent casing, measured as provided above, will be paid for at the Contract unit price set per meter for "Permanent Casing", which price shall be full compensation for all costs of labor, materials, and equipment required above that which is normally required for an uncased shaft. Permanent casing shall only be paid for when the Engineer requires it to be left in place prior to placement of any concrete in the shaft.

Core drilling, measured as provided above, shall be paid for at the Contract unit price set per meter for "Rock Cores", which price shall be full compensation for all cost of labor, materials, and equipment to drill and recover cores as specified.

If the drilled shaft is lengthened during construction as directed by the Engineer, the lap splice length of reinforcing cage will be paid for at the Contract unit price for "Reinforcing Steel".

SECTION 707

BRIDGES

707.01 DESCRIPTION.

All bridges shall be built in accordance with the specifications, in reasonable close conformity to the lines, grades, dimensions and designs shown on the Plans or established by the Engineer.

707.02 MATERIALS.

Materials shall be those prescribed for the several items which are to constitute the complete structure.

707.03 CONSTRUCTION REQUIREMENTS.

The construction methods shall be those prescribed for the several items which are to constitute the complete structure.

The Contractor will provide walkways, platforms, temporary floors or other approved safety devices to facilitate all phases of construction and inspection which are performed on the bridge above the ground.

All safety devices shall be kept free of ice, snow, grease, mud, or any other material or equipment which will render them unsafe. Where slippery surfaces cannot be avoided, abrasive material shall be used to assure safe footing. All safety devices shall be designed, constructed and maintained so as to safely support the full complement of Contractor and Engineer personnel that may be expected to be on the safety devices at any one time, with due consideration given to the type of bridge under construction. All loads including workers, materials and the mass of the bridge itself must be taken into account.

All safety devices subject to sway shall be securely fastened to the bridge or if independent of the bridge shall be braced or guyed.

Lumber used in construction of safety devices shall be good quality, reasonably straight grained and reasonably free of shakes, checks, splits, cross grains, unsound knots or knots in groups, decay or any other condition which will materially decrease the strength of the material.

Each supporting member of the safety device shall be securely fastened and braced. The supporting member shall be

placed on a firm rigid, smooth foundation of a nature that will prevent lateral displacement.

Guard rails which may vary in height from 915 to 1065 millimeters inches shall be provided. Wooden guard rails shall be rigidly supported at intervals not greater than 2.5 meters.

707.04 METHOD OF MEASUREMENT.

The quantities of various items which constitute the completed and accepted structure will be measured for payment according to the Plans and Specifications for the several pay items, and in terms of the prescribed units provided for the several pay items. Only accepted work will be included and the dimensions will be those shown on the Plans, or ordered in writing.

707.05 BASIS OF PAYMENT.

The quantities, measured as provided above shall be paid for at the Contract unit price for the several pay items, which price shall be full compensation for furnishing, hauling, and placing all materials, for all labor, equipment, tools, and all incidentals necessary to complete the work. Such payment shall constitute full payment for the completed structure, and no allowance will be made for cofferdam construction and maintenance of safety devices.

SECTION 708

BEARING DEVICES (TFE)

708.01 DESCRIPTION.

This work shall consist of furnishing and installing complete factory-produced rotational sliding and rotational fixed bearing devices.

BID ITEM
TFE Bearing Device (*).
* size

708.02 MATERIALS.

Materials shall conform to the requirements provided in the Materials Division.

Bearing Devices ..... Section 1700

708.03 CONSTRUCTION REQUIREMENTS.

(a) Shop Drawings.

Shop drawings shall be submitted (maximum size 560 mm × 915 mm) for each location, type and model of device used, showing all details of the device and its installation and approval gained prior to ordering and fabrication.

(b) Installation.

The bearing devices shall be installed in strict conformance with the Plans and the shop drawings. The Contractor shall store the bearing devices in such a manner as to protect them from damage prior to installation. The bearing devices shall be protected during and after installation from contamination and damage due to placing of concrete and other materials. The operating surfaces shall be thoroughly cleaned before final assembly.

708.04 METHOD OF MEASUREMENT.

TFE bearing devices shall be measured by the units of various sizes complete in place.

708.05 BASIS OF PAYMENT.

The amount of completed and accepted work, measured as provided above shall be paid for at the Contract unit price per each for "TFE Bearing Device" of the several sizes, which price shall be full compensation for furnishing, fabricating, delivery and installing all materials, for all labor, tools, equipment and incidentals necessary to complete the work.

SECTION 709

BRIDGE HANDRAIL

709.01 DESCRIPTION

This work shall consist of the furnishing and erection of bridge handrail in accordance with these Specifications and as shown on the Plans or established by the Engineer.

BID ITEM

Bridge Handrail (*).

* Denotes Type

709.02 MATERIALS

All materials shall conform to the requirements provided in the Materials Division.

Structural Steel	Section 1600
Steel Pipe	Section 1600
Structural Steel Tubing	Section 1600
Aluminum Alloy	Section 1600
Gray-Iron Castings	Section 1600
Paint	Section 1800
Cast Aluminum Bridge Handrail Posts	Section 1600

709.03 CONSTRUCTION REQUIREMENTS

Seven copies of shop drawings (maximum size 560 mm × 915 mm) shall be submitted to the Engineer for approval on all types of handrail before the materials are ordered or fabricated.

The handrail shall be constructed in accordance with the details shown on the Plans or established by the Engineer. Unless otherwise provided the vertical members shall be constructed truly vertical and the horizontal members to the grades indicated.

The anchor bolts shall be set with a template to insure proper alignment. The template and methods used by the Contractor shall meet with the approval of the Engineer. That portion of the anchor bolts exposed above the finish line of concrete shall be suitably protected by wrappings, grease or heavy oil during the pouring of concrete.

All handrail material shall be stored at the bridge site above the ground on platforms, skids, or other supports with proper spacer blocks to keep tubing separated. The materials shall be kept free from grease, dirt, and contact with dissimilar metals,

and protected as far as practical from moisture until they have been properly installed.

(a) Steel Handrails.

All fabrication, welding, casting, erection, and painting shall conform with the applicable portions of Section 702. All steel handrail except that which is galvanized or shown as "Weathering Steel", shall receive one shop coat of paint as specified in Section 702. All steel handrail surfaces which will be inaccessible after assembling or erection shall receive two coats of the paint in the shop of the type designated on the Plans. Field painting of steel handrail shall be in accordance with the provisions for painting structural steel unless otherwise shown in the Plans.

The rail shall be set accurately to a transit line and if the posts are of a type having base plates or flanges, they shall be set to grade by the use of shims between the posts and the concrete or base templates. Shims of three millimeter thickness or greater may be of either steel or sheet lead, but the thickness of steel shims or plates shall be such that no more than one is required at each post.

(b) Aluminum Handrail.

Before erection, the areas of concrete upon which aluminum posts are to be set shall be dressed by grinding or rubbing to true surfaces to the extent necessary for the proper seating of the posts. The bottoms of posts shall receive a heavy coating of an approved calking compound to provide complete insulation between the aluminum and the concrete. Aluminum shims shall be used as necessary between the posts and the concrete or base plate for proper alignment or grade. Aluminum adjustment shims at anchor bolts shall be similarly coated. Anchor bolts and the top of bases of posts under anchor bolt nuts shall also be coated. Where aluminum must be joined to another metal, the contacting surface shall be coated with an approved calking compound or paint or separation shall be achieved by the use of a synthetic rubber gasket.

For erection, a group of posts corresponding to the length of each rail piece shall be set over the anchor bolts and the rails inserted through the posts. Erection of groups of rails and posts shall continue successively until all of the handrail of an approved portion of the structure is erected. The handrail shall then be aligned and the nuts on the anchor bolts tightened. In final adjustment no post shall deviate more than three milli-

meters from true alignment and there shall be no abrupt breaks in alignment at any location. Drifting of holes during assembly will be permitted only to bring the parts into position and not sufficient to enlarge the holes or distort the metal. On beveled surfaces washers shall be used to give full bearing to both the head and/or nut.

709.04 METHOD OF MEASUREMENT

Unless otherwise specifically noted on the Plans, bridge handrail shall be measured by the meter in place.

Plan length shall be used unless changes have been made. When changes have been made the rail shall be measured from the center of end post to center of end post of the several sections.

709.05 BASIS OF PAYMENT

The amount of completed and accepted work, measured as provided above, shall be paid for at the Contract unit price per meter for "Bridge Handrail" of the type or types indicated on the Plans, which price shall be full compensation for furnishing, fabricating, welding, delivery, and erecting all materials; including anchor bolts, nuts, washers, shims, plates, and expansion devices, for painting, and for all labor, tools, equipment, and incidentals necessary to complete the work.

SECTION 710

EPOXY RESIN CRACK REPAIR

710.01 DESCRIPTION.

This work shall consist of pressure injection of epoxy resins into cracks where high tensile strength is needed and shall be in accordance with this Specification and the Plans or as directed by the Engineer.

BID ITEM
Epoxy Resin Crack Repair

710.02 MATERIALS.

All materials shall conform to the requirements provided in the Materials Division.

Epoxy Resin for Pressure Grouting..... Section 1700

710.03 CONSTRUCTION REQUIREMENTS.

The type of epoxy resin used for pressure applied crack filler shall be as specified.

(a) Crack Filling shall not be attempted when temperatures are so low as to make proper penetration difficult with the material being supplied for the work. In no case will thinner be permitted.

Drilling to establish injection ports is permissible only when a Kansas type internal vacuum dust collection drill system is utilized. No other drilling system is allowed. Water and/or air pressure extraction is prohibited. Injection ports, if required, shall be surface attached and sealed if vacuum drilling is not used.

(b) Prior to pumping epoxy, cracks shall be sealed with a translucent material which will permit the flow of resin to be observed.

(c) Details of construction usage shall be shown on the Plans or in Special Provisions written for that purpose.

(d) Every reasonable precaution shall be taken to protect all persons at the site from the possible toxic effect of exposure to the epoxy material with particular attention to the methods used to remove the material from the skin.

710.04 METHOD OF MEASUREMENT.

When shown as an item in the Contract, the amount of completed and accepted work shall be measured by the unit shown on the Plans. When not shown as a bid item, it shall be subsidiary to other items of the Contract.

710.05 BASIS OF PAYMENT.

The amount of completed and accepted work measured as provided above, shall be paid for at the price for "Epoxy Resin Crack Repair", which price shall be full compensation for furnishing all materials, for all labor, equipment, tools and incidentals necessary to complete the work.

SECTION 711

SLIPFORMING OF BRIDGE RAILING

711.01 DESCRIPTION.

This work consists of slipforming the bridge railing in lieu of using the conventional forming. If the Contractor elects to use slipforming, the work shall be performed in accordance with this specification.

711.02 MATERIALS.

All materials shall conform to the requirements provided in the Materials Division.

Coarse Aggregate (except gradation)	Section 1100
Fine Aggregate	Section 1100
Cement (Type II)	Section 2000
Fly Ash for use in Concrete	Section 2000
Water	Section 2400

Coarse aggregate shall be a Traprock, Chat or Calcite-cemented sandstone meeting the following gradation requirements.

Sieve Size	Percent Retained
25 mm	0
19 mm	5- 20
12.5 mm	30- 65
9.5 mm	55- 90
4.75 mm	90-100
2.36 mm	95-100

(a) Concrete.

Concrete for slipforming bridge railing shall comply with the following requirements:

KG OF CEMENT PER CU. M, MIN.	KILOGRAMS OF WATER PER KG OF CEMENT, MAX.	PERCENT OF AIR BY VOLUME
390	0.40	6.0 ± 2

Air content shall be determined by KT-19 only (Roll-o-meter).

The concrete shall have a slump not exceeding 12 millimeters and shall be in a workable condition when delivered to the work site.

Aggregate shall be combined such that approximately 55 percent of coarse will be used.

(b) Reinforcing Steel.

Tack welding of reinforcing bars will not be permitted. However, additional tying may be necessary to maintain rigidity of the rebar cage. Plastic coated tie wires shall be used when the bars are epoxy coated.

(c) Curing Compound.

Curing compound shall comply with the requirements of Section 1400 except the compound shall be Type 1-D, clear or translucent, with fugitive dye.

(d) Set Retarder.

Set retarder shall be in accordance with Section 1400.

711.03 EQUIPMENT.

(a) The slipform machine shall be capable of extruding a finished bridge railing meeting the dimensions as shown on the Plans. Personnel operating the slipform machine shall be thoroughly familiar with this type of operation.

(b) Concrete trucks shall be capable of mixing, delivering and unloading low slump concrete, or;

(c) A continuous volumetric mixer meeting the requirements of Division 150 shall be used. The delay for the commencement of tests requirement will not apply.

711.04 CONSTRUCTION REQUIREMENTS.

(a) General.

After the slipformer has been set to the proper grade and alignment, and prior to starting the concrete placement, the clear distance from the slipform forms to the reinforcing bars shall be checked throughout the length of the pour by the Contractor in the presence of the Engineer. During the concrete placement there shall be a person riding the machine monitoring the reinforcing steel at the entrance to the machine to insure proper location of the reinforcing steel and to flatten all tie wires to provide specified clearance.

Ends of the railing shall be formed and the forms securely braced. The guardrail plate shall be securely bolted in place. In addition, the railing sections at name plates, deck drain boxes, light standards, and expansion devices shall be formed for a minimum distance of 1.2 meters on each side of the ex-

ception. At the direction of the Engineer, unacceptable portions of the railing shall be repaired or removed and replaced.

(b) Test Section.

A test section, not to exceed 30 meters in length, will be required on each project to determine the acceptability of the slipforming method. If the test section is not acceptable to the Engineer, the section will be repaired or replaced as directed by the Engineer and the remainder of the rail will be formed and poured in the conventional manner.

(c) Concrete Placement by Trucks.

All concrete shall be placed into the slipform machine within the time limit specified in Division 400.

Maximum revolutions on any load shall not exceed 300.

Water may be added to the truck at the job site up to 30 minutes after the initial addition of mixing water, provided the design water/cement ratio is not exceeded. After the initial 30 minute period, the exterior fins on the truck may be occasionally dampened for an additional 15 minutes to aid in unloading of the concrete.

No additional water will be permitted after the 45 minute time period.

(d) Restrictions.

On bridges with grades exceeding two percent the slipform operation shall proceed in the uphill direction unless approved otherwise by the District Construction Engineer.

The amount of concrete each truck will be allowed to haul shall be limited to the load carrying capacity of the deck as approved by the Engineer. In no case will a load of concrete exceed 75 percent of the trucks rated capacity.

(e) Defective Areas.

All slough areas, bulges or other defects shall immediately be corrected to the satisfaction of the Engineer. Proposed methods of correction shall be previously approved by the Engineer.

(f) Finishing.

The rail shall be lightly broomed with both the inside and outside faces of the rail receiving a vertical brooming and the top broomed perpendicular to the longitudinal axis of the rail.

(g) Curing.

The rail shall receive two coats of liquid membrane applied immediately behind the brooming operation. The rate of curing

membrane will be as prescribed by the Engineer with a minimum spreading rate per application of one liter per six square meters of rail. The second application shall be sprayed immediately after and at right angles to the first application.

(h) Vehicle Movement.

All vehicles entering or leaving the deck shall proceed at slow speed to limit deck movement. Except for the vehicles necessary for the concrete placement operation, no heavy vehicles shall be on the deck of the bridge during concrete placement and for a period of 24 hours following the completion of the concrete placement. Loads on construction vehicles shall be limited to eliminate any overstress in deck concrete.

711.05 METHOD OF MEASUREMENT AND BASIS OF PAYMENT.

This item shall be measured and paid for by the unit(s) shown on the Plans constituting bridge rail, which price shall be full compensation for all materials, labor, equipment, tools, and incidentals necessary to complete the work.

SECTION 712

PIPE CULVERTS AND END SECTIONS

712.01 DESCRIPTION.

This work shall consist of furnishing and/or installation of pipe culverts and end sections for pipe culverts and shall include all the necessary excavation and backfilling for such installations.

BID ITEMS

* Entrance Pipe (**-***).
* Entrance Pipe (**-***) (Furnish Only).
* Entrance Pipe (**-***) (Installation Only).
* Cross Road Pipe (**-***)(*****).
* Cross Road Pipe (**-***)(*****) (Furnish Only).
* Cross Road Pipe (**-***)(*****) (Installation Only).
* End Sections (****).
* End Section (****)(Furnish Only).
* End Section (****)(Installation Only).

No entry denotes that any of the types of pipes or end sections permitted by the provisions of Section 1900 may be furnished, except that end sections furnished shall be same type as pipe.

* Size, diameter or "Bid Designation" minimum Sq. Ft. waterway.
** "BC" denotes bituminous-coated. No entry denotes without bituminous-coating.
*** denotes type of pipe.
**** denotes type of end section.
*****denotes with or without end section(s).

PIPES

"RCP" denotes round reinforced concrete pipe.
"RCPA" denotes reinforced concrete pipe-arch.
"RCPHE" denotes reinforced concrete pipe horizontal elliptical.
"CMP" denotes round corrugated metal pipe.
"CSP" denotes round corrugated steel pipe.
"CAP" denotes round corrugated aluminum pipe.
"CMMAC" denotes corrugated metal-metal arch culvert.
"CSMAC" denotes corrugated steel-metal arch culvert.
"CAMAC" denotes corrugated aluminum-metal arch culvert.
"CP-ES" denotes clay pipe (extra strength).
"CIP" denotes cast iron pipe.

"CPP" denotes corrugated polyethylene pipe.

END SECTIONS

"RC" denotes round reinforced concrete.
"RCA" denotes reinforced concrete arch.
"RCHE" denotes reinforced concrete horizontal elliptical.
"CM" denotes round corrugated metal.
"CS" denotes round corrugated steel.
"CA" denotes round corrugated aluminum.
"CMMA" denotes corrugated metal-metal arch.
"CSMA" denotes corrugated steel-metal arch.
"CAMA" denotes corrugated aluminum-metal arch.

"CMP" and "CMMAC" designations for pipe and "CM" and "CMMA" designations for end sections denotes that either steel or aluminum pipe may be furnished.

Plan and bid designations for Corrugated Metal-Metal Arch culverts, Reinforced Concrete Pipe Horizontal Elliptical and Reinforced Concrete Pipe-Arch will be based on minimum waterway requirements. The following table of minimum waterway for "Bid Designation" shows the corresponding culvert size required for the optional types. Unless otherwise shown on the Plans or in the Contract, either "CMMAC", "RCPHE" or "RCPA" may be furnished.

TABLE 1

"Bid Designation" Minimum Sq. M Waterway	"CMMAC" Area Sq. M Waterway	"RCPHE" Area Sq. M Waterway	"RCPA" Area Sq. M Waterway
0.10	0.10	0.170	0.15
0.15	0.15	0.170	0.15
0.20	0.20	0.305	0.20
0.25	0.26	0.305	0.26
0.30	0.41	0.305	0.41
0.38	0.41	0.383	0.41
0.45	0.59	0.474	0.59
0.55	0.59	0.588	0.59
0.65	0.82	0.684	0.82
0.80	0.82	0.816	0.82
0.90	1.06	0.948	1.06
1.00	1.06	1.200	1.06
1.15	1.33	1.20	1.33
1.30	1.33	1.55	1.33
1.54	1.64	1.55	1.64

712.02 MATERIALS.

All materials shall conform to the requirements provided in the Materials Division.

Metal Pipe	Section 1900
Reinforced Concrete Pipe	Section 1900
Clay Pipe (Extra Strength)	Section 1900
Cast Iron Pipe	Section 1900
Metal End Sections	Section 1900
Reinforced Concrete End Sections	Section 1900
Corrugated Polyethylene Pipe	Section 1900

NOTE: The type of pipe to be furnished for Cross Road Pipe or Entrance Pipe may be any of the types permitted by the provisions of Section 1900 except when a certain type or types are designated on the Plans or in the Contract, then only the specified type or types shall be furnished. The same type of pipe base metal (Steel or Aluminum) shall be used throughout any individual run or installation of pipe or for pipe extension, including end sections.

When the Plans and Contract specify to Install Only, all pipe culverts and end sections for pipe culverts for this item will be furnished by the Kansas Department of Transportation from a storage site on or near the project or at locations indicated on the Plans.

712.03 CONSTRUCTION REQUIREMENTS.

(a) Ordering Pipe.

The Contractor shall not order and deliver the pipe for cross-road pipe, entrance pipe or end sections until a correct list of sizes and lengths is furnished him by the Engineer.

(b) Furnishing and Delivery of Pipe.

When the Plans and Contract specify to Furnish Only, the Contractor shall furnish and deliver the pipe culverts and/or end sections to the project at the location as indicated on the Plans or as directed by the Engineer. The pipe culverts and/or end sections under this item will be installed on a future Contract or by the Kansas Department of Transportation.

(c) Excavating and Forming Bed for Pipe.

The excavation for pipe culverts shall be performed in accordance with the requirements of Section 207.

(d) Laying Pipe.

No pipe culverts shall be placed until the foundations have been approved by the Engineer. Where two or more culverts are to be placed adjacent to each other they shall be separated by a distance equal to at least 1/2 the diameter of the pipe with a minimum distance of 450 millimeters for pipe culvert and a

minimum distance of 600 millimeters in all cases for metal arch culvert.

When multiple sections of pipe are required at any one location, the longest section of pipe shall always be installed on the upstream end, the next longest section on the outlet end, with shorter sections to the middle of the run. All pipes shall be laid with ends abutting and true to line and grade. They shall be fitted and matched so that when laid in the work they will form a smooth and uniform invert.

On helical, corrugated steel pipe, the pipe sections should be rotated and fit together so that the corrugations on the end of one section match those on the end of the adjoining section prior to attaching and snugging up the connecting band. On large diameter structures, merely tightening bolts on the connecting bands will not assure a tight joint due to the friction between the band and pipe ends. On such installations the band should be tapped with a mallet to take up the slack as the band is tightened.

(e) Backfilling.

All pipe culverts should be installed with the area under the haunches well compacted and all voids filled as well as possible. The backfilling shall conform to the requirements of Section 207.

712.04 METHOD OF MEASUREMENT.

This work shall be measured by the meter of the various classes and sizes of pipe culverts and per each for the various classes and sizes of end sections. Pay lengths for pipe culverts shall be the lengths of pipe designated on the summary of quantities sheets contained in the Plans unless otherwise revised in writing by the Engineer.

Gain in pipe length due to fit of pipe at connecting bands shall not be paid for.

When metal pipe is shown on the Plans to be (Furnished Only), the Contractor shall provide the necessary coupling bands for future joints. The coupling bands shall be considered as subsidiary to the items of pipe culverts furnished for which payment is made.

When the Plans and Contract contain the items "Cross Road Pipe with End Section(s)" and/or "Cross Road Pipe without End Sections" under alternate drainage structures; the cross road pipe with or without end sections shall be measured by the meter as designated on the Plans. No separate measurement

will be made of the end sections under the item "Cross Road Pipe with End Section(s)".

712.05 BASIS OF PAYMENT.

The amount of completed and accepted pipe culverts and/or end sections, measured as provided above, shall be paid for at the Contract unit prices per meter for the various sizes of "Entrance Pipe", "Cross Road Pipe", and per each for the various sizes and types of "End Sections", which prices shall be full compensation for furnishing and/or placing all materials, for all labor, excavation, backfilling, equipment, tools, and incidentals necessary to complete the work.

When the Plans and Contract contain the items "Cross Road Pipe with End Section(s)" and/or "Cross Road Pipe without End Sections" under the alternate drainage structures; the amount of completed and accepted work shall be measured as provided above, and shall be paid for at the Contract unit price per meter for "Cross Road Pipe with End Section(s)" and "Cross Road Pipe without End Sections" which prices shall be full compensation for furnishing and placing all materials, for all labor, excavation, backfilling, equipment, tools and incidentals necessary to complete the work.

SECTION 713

RESERVED

SECTION 714

STRUCTURAL PLATE STRUCTURES

714.01 DESCRIPTION.

This item shall consist of the furnishing, assembling, and installing of fabricated corrugated metal plates for large diameter pipe, pipe arches, or arches in accordance with these Specifications, as shown on the Plans or directed by the Engineer.

BID ITEMS
*Structural Plate Pipe (**).
*Structural Plate Pipe Arch (**).
*Structural Plate Arch (**).
*Size, diameter or span and height.
**Specify gauge required.

714.02 MATERIALS.

All materials shall conform to the requirements provided in the Materials Division.

Bituminous-Coated Corrugated Metal	Section 1900
Structural Plates for Pipe, Pipe Arches and Arches	Section 1900

714.03 CONSTRUCTION REQUIREMENTS.

The design of structural plate pipe, structural plate pipe arch and structural plate arch culverts shall be approved by the Engineer prior to installation. If concrete footings are required by the Plans, they shall be constructed in accordance with the provisions of Section 701 and Section 703.

(a) Excavating and Forming Bed.

Excavating and forming the bed for structural plate pipe, pipe arch and arch culverts shall be in accordance with the provisions of Section 207. Where two or more culverts are placed adjacent to each other they shall be separated by a distance equal to 1/2 the diameter of the pipe for structural plate pipe culvert and by a distance of 600 millimeters for structural plate pipe arch culverts.

(b) Erection.

The erection of the pipe, pipe arch, or arch shall be carried out in a workmanlike manner. Plates which are damaged by

denting or bending, and plates on which the spelter coating is damaged, shall be replaced at the Contractor's expense. All bolted connections shall be tight and the completed structural plate structure true to the dimension shown on the Plans.

(c) Strutting.

If required on the Plans, timber strutting shall be furnished and erected within the pipe, pipe arch, or arch in accordance with the details shown. The strutting shall remain in place until the culvert is completely backfilled.

(d) Backfilling.

Backfilling of structural plate pipe, pipe arch, and arch culverts shall be in accordance with the provisions of Section 207.

714.04 METHOD OF MEASUREMENT.

Structural plate pipe, structural plate pipe arch, and structural plate arch culverts shall be measured by the meter complete in place.

Pipe or arches with vertical ends shall be measured from end to end of the pipe or arch. Pipe or arches with sloping ends shall be measured from the center point of the slope on one end to the center point of the slope on the opposite end.

714.05 BASIS OF PAYMENT.

The amount of completed and accepted work measured as provided above, shall be paid for at the Contract unit price per meter for "Structural Plate Pipe", "Structural Plate Pipe Arch", or "Structural Plate Arch", which prices shall be full compensation for furnishing and placing all materials, for all labor, excavation, backfilling, equipment, tools, and incidentals necessary to complete the work.

SECTION 715

CORRUGATED METAL SHEET PILING

715.01 DESCRIPTION.

This item shall consist of flange or interlocking corrugated metal sheet piling as shown on the Plans or as directed by the Engineer.

BID ITEMS
Galvanized Corrugated Metal Sheet Piling.
Black Corrugated Metal Sheet Piling.

715.02 MATERIALS.

All materials shall conform to the requirements provided in the Materials Division.

Corrugated Metal Sheet Piling and Sheet Metal for Wash Checks ..... Section 1600

715.03 CONSTRUCTION REQUIREMENTS.

The length of sheet piling shall be as shown on the Plans or as otherwise ordered in writing by the Engineer. Any excavation required below the original ground line or below the line shown on the Plans in order to drive the sheet piling, the necessary backfilling to those lines, and the proper compaction of the backfill shall be the responsibility of the Contractor. The excavation, backfilling and compaction shall be considered as work subsidiary to the driving of the sheet piling.

The sheet piling may be driven with a light hammer of such mass and so operated that it will not damage the sheet piling.

An approved fabricated or cast driving head with corrugations to engage the top of the sheeting shall be used in driving the sheet piling.

The sheet piling shall be set and held in the proper position by the use of frames, guides or templates and shall be driven as nearly vertical as possible. Sheet piling that are driven out of line shall be pulled and redriven.

If necessary, the Engineer may require the Contractor to provide, at his own expense, water jets or use other approved methods to obtain a penetration satisfactory to the Engineer, without injury to the sheet piling in the driving.

The sheet piling shall be driven to the penetration shown on the Plans unless the Engineer decides it is impractical to get

the penetration shown without injury to the sheet piling, in which case the Contractor will be required to cut the sheet piling off at the elevation ordered by the Engineer.

When "Black Corrugated Metal Sheet Piling" is used and the Plans specify that the piling is to be painted, the type of paint and the total number of coats to be applied shall be as shown on the Plans.

715.04 METHOD OF MEASUREMENT.

This item shall be measured by the meter of corrugated metal sheet piling ordered and accepted. If it is necessary to cut off any of the sheeting the Contractor shall bear the expense of cutting the sheeting off. No deduction will be made for the length of sheeting cut off.

715.05 BASIS OF PAYMENT.

The amount of completed and accepted work, measured as provided above, shall be paid for at the Contract unit price per meter for "Galvanized Corrugated Metal Sheet Piling" or "Black Corrugated Metal Sheet Piling", which price shall be full compensation for furnishing all materials, for all labor, excavation, backfilling, equipment, tools and incidentals necessary to complete the work.

SECTION 716

ENCASEMENT PIPE

716.01 DESCRIPTION.

This item shall consist of the installation of Encasement Pipe in accordance with this Specification, as shown on the Plans or directed by the Engineer.

BID ITEM:
(*) (**) Encasement Pipe.
* Size.
** Type.

716.02 MATERIALS.

The Encasement Pipe shall conform to the requirements specified on the Plans.

716.03 CONSTRUCTION REQUIREMENTS.

This work shall be performed in accordance with the best construction practices for such work and shall meet the approval of the Engineer.

The trenches, if required, shall be of such width as is necessary or as specified on the Plans to properly lay the pipe and shall be constructed according to the lines and grades established by the Engineer.

All pipe shall be properly connected as recommended by the manufacturer. The backfilling of the encasement pipe, if required, shall conform to the requirements of Section 207 of the Standard Specifications.

716.04 METHOD OF MEASUREMENT.

This item shall be measured by the meter along the centerline of the encasement pipe installed.

716.05 BASIS OF PAYMENT.

The amount of completed and accepted work, measured as provided above, shall be paid for at the Contract unit price per meter for "Encasement Pipe", of the various sizes and types shown on the Plans, which price shall be full compensation for furnishing, placing and connecting all materials, for all excavation, backfilling, labor, equipment, tools and incidentals necessary to complete the work.

SECTION 717

CONCRETE (COMMERCIAL GRADE)

717.01 DESCRIPTION.

This work shall consist of furnishing a commercial grade concrete mixture from a ready-mix plant approved by the Engineer, and placing the concrete in accordance with this Specification and as shown on the Plans or established by the Engineer.

BID ITEM:
Concrete (Commercial Grade) (*).
* "AE" denotes air-entraining concrete.
No entry denotes without air.

717.02 MATERIALS.

The commercial grade concrete mix shall be approved by the Engineer. This approval will in general be based upon the following conditions:

(a) All materials shall be those normally used for the production and sale of concrete in the vicinity of the project.

(b) The mixture produced shall have a minimum cement content of 7.85 sacks (335 kg) of cement per cubic meter of concrete and a maximum water cement ratio of 0.55 kg of water per kg of cement including free water in aggregates.

(c) Type I, II or III cement may be used unless designated otherwise on the Plans or by the Engineer. Substitution of fly ash for cement will be in accordance with Division 400.

(d) No additives other than air entraining agent will be allowed.

717.03 EQUIPMENT.

Good engineering judgment shall be exercised in determining what equipment will be allowed for use in proportioning, mixing, transporting, placing, consolidating and finishing the concrete.

717.04 CONSTRUCTION REQUIREMENTS.

Construction and placing requirements will be in accordance with the best current industry practices and techniques. The

use of commercial grade concrete will be permitted on items designated on the Plans or in the Contract.

The ready-mix concrete plant shall provide with each load of concrete, before unloading at the site, a delivery ticket containing the following information:

(a) name and location of plant
(b) time of batching concrete
(c) mix proportions of concrete (or a mix designation approved by the Engineer)
(d) number of cubic meters of concrete batched.

The various items poured shall be cured the length of time stipulated in Section 701.

The commercial grade concrete may be sampled by the molding of three sets for compression testing. This will be for informational purposes only. No slump or unit mass tests will be required.

717.05 WEATHER LIMITATIONS.

Uncured concrete will not be allowed to freeze.

717.06 BASIS OF ACCEPTANCE.

Acceptance of concrete furnished under this Specification will be based on visual inspection and the producers load tickets.

717.07 METHOD OF MEASUREMENT.

Quantities of Concrete (Commercial Grade) shall be measured as provided for under the various pay items which constitute the completed and accepted structures according to the Plans and Specifications for the various items.

717.08 BASIS OF PAYMENT.

The quantities of Concrete (Commercial Grade) measured as provided above, shall be paid for at the Contract unit prices under various items of the Contract and shown on the Plans, which payment shall be full compensation for all items as enumerated in the sections involved.

SECTION 718

RESERVED

SECTION 719

RESERVED

SECTION 720

BRIDGE DECK WEARING SURFACE

720.01 DESCRIPTION.

This work shall consist of constructing a wearing course consisting of Portland cement concrete on the prepared surface of a reinforced concrete bridge deck. The work shall be done in accordance with this Specification and as shown on the Plans or as directed by the Engineer.

BID ITEM

Bridge Deck Wearing Surface(*).

* Denotes Thickness

720.02 MATERIALS.

(a) Portland Cement.

Section 2001, except only Types IP, I(PM) or II shall be permitted.

Fly Ash modified concrete shall be permitted. Substitution of Fly Ash for Portland cement shall be in accordance with Section 402.

(b) Coarse Aggregate.

Section 1102.02 (a) delete articles (1) thru (2.1) inclusive and replace with the following:

(1) Coarse aggregates for use in bridge deck wearing surfaces shall be naturally occurring crushed stone and shall conform to the requirements hereinafter specified.

(2) Quality.

(2.1) Soundness, minimum	0.95
(2.2) Wear, maximum	40%
(2.3) Acid Insoluble Residue, minimum	55%

(3) Coarse Aggregate shall meet the following gradation requirement.

SIEVE SIZE	PERCENTAGE RETAINED
19 mm	0
12.5 mm	0- 10
9.5 mm	15- 50
4.75 mm	85-100
2.36 mm	95-100

(c) Fine aggregate.

Section 1100, Type FA-A.

(d) Mortar Sand for Grout.

Section 1102.02 (e) Type FA-M. In lieu of using FA-M it will be permissible to furnish aggregate complying with the grading requirements of FA-A provided the plus 4.75 mm material is removed.

(e) Water.

Section 2400.

(f) Curing Materials.

Section 1400.

(g) Admixtures.

(1) Air Entraining Admixture. Section 1400.
(2) Water Reducing Admixture, Type A, Section 1400. Water Reducing Admixture only may be used.

(h) Precure Material.

This material shall be an approved material, capable of producing a monomolecular film over freshly placed concrete. Basis of acceptance shall be visual inspection and acceptance by the Engineer.

720.03 EQUIPMENT.

Equipment used shall be subject to approval of the Engineer and shall comply with the following:

(a) Surface Preparation Equipment.

Sand-Blasting and Water Jetting Equipment shall be capable of removing rust, oil, dirt, loose disintegrated concrete, concrete laitance and curing material from the existing surface of the bridge deck. Wet sand blasting shall be used only with permission of the Engineer.

(b) Proportioning and Mixing Equipment.

This equipment shall meet the requirements of Division 150 with the following exceptions:

A construction skip type mixer, stationary concrete mixer of the rotating-paddle type, or a continuous mixer used in conjunction with volumetric proportioning, will be required. For batch mixers, a two minute minimum mix time is required. Sufficient mixing capacity of mixers shall be provided to permit the intended pour to be placed without interruption.

(c) Placing and Finishing Equipment.

This equipment shall include adequate hand tools for placement of stiff plastic concrete and for working down to approximately the correct level for striking-off with the finishing screed. The finishing machine shall be inspected and approved by the Engineer before work is started on each project and shall meet the following requirements.

The finishing machine shall consist of a mechanical strike-off capable of providing a uniform thickness of concrete slightly above finish grade in front of an oscillating screed or screeds.

At least one oscillating screed shall be designed to consolidate the concrete by vibration to 100 percent of the rodded unit mass. A sufficient number of identical vibrators shall be effectively installed such that at least one vibrator is provided for each 1.5 meters of screed length. The bottom face of this screed shall be at least 125 millimeters wide with a turned up or rounded leading edge to minimize tearing of the surface of the plastic concrete. Each screed shall have an effective mass of at least 365 kilograms for each square meter of bottom face area. Each screed shall be provided with positive control of the vertical position, the angle of tilt, and the shape of the crown. Design of the finishing machine together with appurtenant equipment shall be such that positive machine screeding of the plastic concrete will be obtained as close as practical to the face of the existing curb line. Consolidation of the area along the edge of the curb line shall be accomplished by the use of hand held vibrators. The length of the screed shall be sufficient to uniformly strike-off and consolidate the width of the lane to be paved. The finishing machine shall be capable of forward and reverse motion under positive control. The finish machine shall travel upon supporting rails which shall be fully adjustable (not shimmed) to obtain the correct profile, unless otherwise approved by the Engineer. Other methods or equipment

to support the finishing machine may be approved by the Engineer. Supports shall be sufficiently rigid that they do not deflect under the mass of the machine. Anchorage for supporting rails shall provide horizontal and vertical stability. When placing concrete in a lane abutting a previously completed lane, the side of the finishing machine adjacent to the completed lane shall be equipped to travel on the completed lane.

Manufacturer's specifications and/or certification may be used as verification of the finishing machine requirements.

The finishing machine shall operate so that when concrete is being mixed and placed under normal operating conditions, the elapsed time between depositing the concrete on the floor and final screeding shall not exceed ten minutes unless otherwise authorized by the Engineer.

720.04 CONSTRUCTION REQUIREMENTS.

(a) Proportioning.

Concrete for bridge deck wearing surface shall comply with the following requirements:

Kg of Cement Per cu. M, Min.	Kg of Water per Kg. of Cement, Max	Percent of Air by Volume
371	0.40	6.0 ± 2 *

* As determined by KT-19 only (Roll-o-meter)

A water-reducing admixture for improving workability may be required. Use of such admixture shall be approved by the Engineer.

The slump shall not exceed 20 millimeters.

If a continuous mixer is used the commencement of tests shall be delayed from 4 to 4½ minutes after the sample has been taken. If a batch type mixer is used the tests shall be taken at the point of placement and shall commence immediately.

Aggregates shall be combined such that the proportions of coarse and fine aggregate shall be equal by mass.

(b) Portland Cement Grout.

Grout shall consist of a one-to-one by mass mixture of Portland cement and Mortar Sand (FA-M) with a water/cement ratio of 0.60 by mass added to produce a "Heavy Cream" consistency.

The consistency of the grout slurry shall be such that it can be applied with a stiff brush, broom, or sprayed on with ap-

proval of the Engineer, to the previously placed concrete in a thin, even coating that will not run or puddle in low spots.

When grout is applied by pressure spraying, it shall consist of a mixture of Portland cement and sufficient water added to produce a paint consistency.

For sealing vertical joints between adjacent lanes, this grout may be thinned to paint consistency.

(c) Preparation of Surface.

(1) Old, Existing Concrete Decks. Prior to application of grout in preparation for placement of new concrete, a final cleanup shall be made by sandblasting followed by an air blast to remove all loose disintegrated concrete, dirt, oil, laitance from patches and other foreign material from the surface of the prepared deck and bottom 75 millimeters of hubguard. It is not intended that the old, existing concrete deck, which has been prepared for overlaying, be presaturated before grout and concrete overlay is placed. There shall be no free water and the surface should be dry to allow some absorption of the grout.

(2) New Concrete Decks. All oil, dirt, loose, disintegrated, or unsound concrete, curing material and concrete laitance shall be removed from the bridge floor as designated by the Engineer.

Prior to applying grout in preparation for placement of new concrete, the surface shall be sand blasted followed by an air blast. The sand blast shall be of such an extent as to remove all dirt, oil, curing material and other foreign material, as well as any unsound concrete or laitance from the surface, the bottom 75 millimeters of the hubguard, and edges against which new concrete is to be placed. Metal floor drains and areas of the curb or railing above the proposed surface shall be protected from the sand blast.

To assure that all curing material has been removed the contractor shall, after sandblasting and air blasting, spray the deck with water. If the water shows (beading) the above procedure will continue until the surface is free of all curing material. Other methods for checking the presence of curing material may be approved by the engineer. The prepared surface shall be clean and dry prior to placing of grout.

The thickness of all new concrete above the prepared surface shall be as specified on the Plans. The finish machine clearance shall be checked before concrete is placed.

(d) Proportioning and Mixing of Concrete Materials.

The applicable provisions of Section 402 shall apply with the following exceptions and additional provisions:

(1) Concrete shall be mixed at the project site. Ready-mixed concrete will not be approved.

(2) Water-reducing admixture for improved workability, if used, shall be mixed and incorporated in the concrete mixture in accordance with the manufacturer's recommendations and the Engineer's instructions.

(e) Placing and Finishing Concrete.

A finishing machine meeting the requirements stipulated in subsection 720.03(c) will be required. Screed rails shall be placed and fastened in position to insure finishing the concrete to the required profile. The supporting rails upon which the finishing machine travels shall be placed outside the area to be concreted. A hold-down device shot into concrete will not be permitted unless the concrete is to be subsequently overlaid. Hold-down devices of other types leaving holes in exposed areas will be approved provided the holes remaining are grouted full. Methods for anchoring and supporting the rails and the concrete placing procedure shall be approved by the Engineer.

Longitudinal joints will be located in accordance with details shown on the Plans or as approved by the Engineer. The joints shall be kept clear of wheel paths as much as practical.

The concrete shall be produced and placed in as continuous and uniform of an operation as practical. After the surface has been cleaned and immediately before placing concrete, a thin coating of bonding grout shall be scrubbed or sprayed into the dry, prepared surface. Care shall be exercised to insure that all parts receive a thorough, even coating and that no excess grout is permitted to collect in pockets. The rate of progress in applying grout shall be limited so that the grout does not become dry before it is covered with new concrete. If the grout is allowed to dry out, a header shall be placed and no further concreting shall be done until the old grout has been removed and the surface again cleaned by sand blasting. The new concrete shall be manipulated, mechanically struck off and mechanically consolidated to within a minimum of 98.0 percent of the rodded unit mass and screeded to final grade. Hand tamping or hand held vibrators shall be used if deemed necessary by the Engineer to assist in consolidation and bonding of the concrete. The Engineer will use an approved Nuclear Density Measuring Device to monitor in-place density. Hand floating operations may be required to produce a tight, uniform surface. The Contractor shall take every reasonable precaution to se-

cure a smooth riding bridge deck. Surface variations exceeding three millimeter in three meter shall be corrected.

When a tight, uniform surface has been achieved, the surface shall be given a suitable texture by transverse grooving with a finned float or vibratory finned float having a single row of fins. The grooving shall be approximately five millimeters in width at 20 millimeter centers and the groove depth should be approximately three millimeters. This operation shall be performed at such time and in such manner that the desired texture will be achieved while minimizing displacement of the larger aggregate particles. For bridges having drains the transverse grooving should terminate approximately 600 millimeters in from the gutter line at the base of the curb. This area adjacent to the curbs should be given a light broom finish longitudinally. Sealing of vertical joints with thinned grout will not be required.

The exposed edge of the end spans of bridges which form a part of the road surface shall be finished with an edger having a six millimeter radius.

(f) Curing.

Immediately after completion of finishing operations or as directed by the Engineer, the concrete surface shall be cured in accordance with subsection 701.03(h).

(g) Weather Limitations.

(1) Concreting in Hot Weather. Subsection 701.03 (e) for hot weather concreting shall apply.

(2) Concreting in Cold Weather. Except by specific written authorization concreting operations shall not be continued when a descending ambient air temperature falls below 7°C nor shall operations be started or resumed until an ascending ambient air temperature reaches 4°C nor shall operations be carried on when night time temperatures are expected to fall below 2°C.

(h) Concreting in Adverse Weather.

When the Engineer deems it necessary, monomolecular film may be used to prevent rapid evaporation of water rising to the surface of the concrete. When used, the film shall be uniformly spread over the entire roadway width. Use of this film in no way alters the requirements for curing as provided. It is used to prevent rapid evaporation between the initial strike off and texturing prior to covering with the curing media. One or more light applications of this material may be required de-

pending on the weather and sequence of consolidating and finishing operations. When in the judgement of the Engineer, a combination of temperature, low humidity and wind create adverse conditions, monomolecular film may be used to help obtain a more uniform finish.

(i) Limitations of Operations.

Work on the wearing surface shall not commence, when a new deck is involved, until the lower course meets the time requirements of Section 701 unless specified otherwise.

Concrete shall not be placed adjacent to a surface course less than 36 hours old; however, this restriction does not apply to a continuation of placement in a lane or strip beyond a transverse joint in the same lane or strip.

No traffic shall be permitted on a finished surface course until 72 hours after placement. At temperatures below 13°C, the Engineer may require a longer waiting time.

In areas where there is no traffic, preparation of the area may be started in a lane or strip adjacent to the newly placed surface the day following its placement. If this work is started before the end of the 72-hour curing period, the work will be restricted as follows:

Sawing or other operations shall interfere with the curing process for the minimum practical time only, and in the immediate work area only, and the curing shall be resumed promptly upon completion of the work. The exposed areas shall be kept damp until such time as curing media is replaced. No power-driven tools heavier than a seven kilogram chipping hammer shall be used.

(j) Placement of Centerline Form and Headers.

If these forms cannot be held in place in a manner preventing movement during consolidating and finishing the old concrete shall be sawed back 150 millimeters and chipped away before new concrete is placed against hardened concrete from previous placements.

(k) Correction of Unbonded Areas.

If during construction of the project, newly overlaid areas are discovered by tapping to be unbonded, concrete from such areas shall be outlined by sawing, removed with small air tools and replaced by the Contractor at no additional compensation.

720.05 METHOD OF MEASUREMENT.

Bridge deck wearing surface will be measured by the square meter to the nearest 0.01 sq. meter complete in place. The quantity for which payment will be made may be the quantities shown on the Plans provided the project is constructed as shown on the Plans. When the Plans have been altered or when disagreement exists between the Contractor and Engineer as to accuracy of the Plan quantities, either party shall have the right to request and cause the quantities to be measured.

720.06 BASIS OF PAYMENT.

The amount of completed and accepted work, measured as provided above, shall be paid for at the Contract unit price per square meter for "Bridge Deck Wearing Surface", which price shall be full payment for furnishing and placing all materials, equipment, forms, tools, labor and incidentals necessary to complete the work.

SECTION 721

TRAP-ROCK WEARING SURFACE

721.01 DESCRIPTION.

This work shall consist of constructing a Trap-Rock wearing surface, wet bonded to a structural concrete bridge deck, within the area and to the depth designated on the Plans.

BID ITEM
Trap-Rock Wearing Surface (*).
* Designated Thickness

721.02 MATERIALS.

(a) Portland Cement.

Portland Cement, Section 2001, except for Types IP, I (PM) or II shall be permitted.

Fly Ash modified concrete shall be permitted. Substitution of Fly Ash shall be in accordance with Division 400.

(b) Trap-rock.

Trap-rock shall be a crushed basalt aggregate complying with the requirements of Section 1102 for coarse aggregate with the following exceptions.

Soundness, minimum 0.90
Wear (Max.) 20%

The gradation of the aggregate shall conform to the following:

SIEVE DESIGNATIONS (Square Openings)	PERCENT RETAINED (By Mass)
19 mm	0
12.5 mm	0- 10
9.5 mm	15- 50
4.75 mm	85-100
2.36 mm	95-100

The combined weight of (a) clay lumps and friable particles, (b) soft particles, (c) material finer than the 75 μm Sieve, and (d) coal and lignite, shall not exceed two percent of the weight of Trap-Rock samples.

Methods of sampling and testing shall conform to the applicable portions of Section 1116.

(c) Fine Aggregates.

Fine aggregate shall consist of natural sand resulting from the disintegration of siliceous and/or calcareous rocks or manufactured sand produced by crushing predominantly siliceous material and shall conform with the requirements of Section 1102.02 (c) with the following exceptions: the aggregate shall be free from injurious amounts of organic impurities and from injurious amounts of alkali. Other deleterious substances shall not exceed the following percentages by weight:

Material passing 75 μm	2.0
Shale, Lignite, Coal, soft or flaky fragments	0.25
Sticks and other substances (wet)	0.25
Clay lumps (wet, on 4.75 mm Sieve)	0.25

The fine aggregate shall be well-graded from coarse to fine and shall comply with the following requirements:

SIEVE DESIGNATIONS (Square Openings)	PERCENT RETAINED (By Mass)
12.5 mm	0
9.5 mm	0 - 1
4.75 mm	0 - 5
2.36 mm	5 - 15
1.18 mm	15 - 40
600 μm	40 - 70
300 μm	70 - 90
150 μm	90 - 100

The fine aggregate shall not have more than 35 percent retained between any two consecutive sieves and the fineness modulus shall be between 2.50 and 3.10. Uniformity of supply for fine aggregate shall be in accordance with subsection 1102.02(a)(2.3) for coarse aggregate.

(d) Water. Section 2401.

(e) Air-Entraining Agents. Section 1400.

(f) Admixtures.

Admixtures shall not be used unless specifically approved by the Engineer. Calcium chloride shall not be used. When the ambient air temperature is 30°C or above, an approved retarder shall be used as directed by the Engineer.

(g) Mix Design.

The Contractor shall submit a tentative trap-rock concrete mix, designed by a competent testing laboratory, to the Engineer for approval before the use of trap-rock concrete in this

work. After a mix has been approved, it shall be subject to additional adjustment in the field by the Engineer whenever necessary to produce a mixture of proper workability, uniform consistency, and acceptable density and strength. The tentative trap-rock concrete mix design shall include the following.

(1) Complete tests of the fine aggregate and the trap-rock aggregate showing their conformance of these specifications.

(2) Sources of Aggregates.

(3) Mass of all materials used for one cubic meter of fresh mixed concrete (aggregate mass shall be based on saturated, surface dry materials).

(4) Brand names of the cement and air-entraining agent.

(5) Air content of the tentative mix design.

(6) Slump of the tentative mix design.

(7) Compressive strength of test specimens made and cured in accordance with ASTM Designation C 192, Making and Curing Concrete Test Specimens in the laboratory, and tested in accordance with ASTM Designation C 39, Compressive strength of Cylindrical Concrete Specimens. A minimum of two specimens shall be tested at seven days and two specimens at twenty-eight days. This information shall be submitted to the Engineer in as timely a manner as practical.

721.03 CONSTRUCTION REQUIREMENTS.

(a) Proportioning.

The trap-rock concrete shall have a minimum of 390 kilograms of cement per cubic meter of fresh concrete. The air content shall be 6 percent plus or minus 2 percent.

Mixing water shall not exceed 0.44 kilograms of water per kilogram of cement. Surface moisture in the aggregate shall be considered a part of the mixing water. Water which is absorbed by the aggregates before placing shall not be included as part of the mixing water.

The designated slump shall not exceed 50 millimeters.

The relative proportions of fine and coarse aggregates in the mix shall be such that trap-rock concrete of maximum density, proper workability and desired consistency is produced. A specified limitation will not be placed on the ratio of aggregates, but it is suggested that the amount of trap-rock be in the range of 55 percent and the fine aggregate 45 percent.

Any load of concrete, in which the specified air content does not conform to the requirements shall be rejected and removed from the job site. The air content shall be measured in accor-

dance with the Standard Method of Test for Air Content of Freshly Mixed Concrete by the Volumetric Method, KT-19.

(b) Mixing.

All trap-rock concrete used in this work shall be ready mix concrete. Ready mix concrete shall be mixed and transported in accordance with Section 402. Any concrete which is not plastic and workable when placed in the work shall be rejected.

(c) Placing, Consolidation and Finishing.

(1) Concrete for wearing courses shall be placed upon the structural concrete forming the bridge deck roadway within one hour after the placement of the structural concrete so as to secure monolithic construction. The structural concrete shall have attained a consistency such that it will not be displaced nor its surface disturbed by the placing of the wearing course concrete. Wearing course concrete shall be manipulated, mechanically struck off and mechanically consolidated to a minimum of 98.0 percent of the rodded unit mass and screeded to final grade. Hand tamping or hand held vibrators shall be used if deemed necessary by the Engineer to assist in consolidation and bonding of the concrete. The Engineer will use an approved nuclear density measuring device to monitor in-place density. Hand floating operations may be required to produce a tight, uniform surface. The Contractor shall take every reasonable precaution to secure a smooth riding bridge deck. Surface variations exceeding three millimeter per three meters shall be corrected unless directed otherwise by the Engineer.

Workers shall not walk on any structural or wearing surface concrete. Bridges shall be provided for all operations over the concrete surface.

(2) As an alternate to the two course construction, the Contractor may, with the approval of the Engineer, pour the subdeck and wearing course as one operation using the wearing course concrete throughout. When this alternate is used, handling and placing of concrete shall be in accordance with Section 701.03. No additional compensation for this alternate will be allowed.

When a tight, uniform surface has been achieved, the surface shall be given a texture by transverse grooving with a finned float having a single row of fins. The grooving shall be approximately five millimeters in width at 20 millimeter centers and the groove depth should be approximately three millimeters. This operation shall be performed at such time and in

such manner that the desired texture will be achieved while minimizing displacement of the larger aggregate particles. The transverse grooving should be terminated approximately 600 millimeters in from the gutter line at the base of the curb. This area adjacent to the curbs should be given a light broom finish longitudinally. Sealing of vertical joints with thinned grout will not be required.

(d) Curing.

Immediately after completion of finishing operations or as directed by the Engineer, the concrete surface shall be cured in accordance with subsection 701.03(h).

(e) Weather Limitations.

(1) Trap-rock concrete placement in hot weather shall be in accordance with subsection 701.03(e).

(2) Trap-rock concrete placement in cold weather shall be in accordance with subsection 701.03(h)(7).

721.04 METHOD OF MEASUREMENT.

The quantities of trap-rock wearing surface shall be those shown on the Plans, measured to the nearest 0.01 of a square meter.

Trap-rock concrete wearing surface shall be measured to the nearest 0.01 of a square meter complete in place. The quantity for which payment will be made may be the quantities shown on the Plans provided the Project is constructed as shown on the Plans. When the Plans have been altered or when disagreement exists between the Contractor and Engineer as to the accuracy of the Plan quantities, either party shall have the right to request and cause the quantities to be measured.

If the subdeck and wearing course are poured in one operation as allowed in subsection 721.03(2), the subdeck concrete will be measured and paid for in accordance with Sections 701.04 and 701.05 and the Trap- rock wearing surface will be measured in square meters as provided above.

721.05 BASIS OF PAYMENT.

The amount of completed and accepted work measured as provided above shall be paid for at the contract unit price per square meter for "Trap-Rock Wearing Surface", which price shall be full compensation for furnishing, quarrying, preparing, transporting, delivering, mixing and placing all materials, for all labor, equipment, tools and incidentals necessary to complete the work.

SECTION 722

AREA PREPARED FOR PATCHING (EXISTING CONCRETE BRIDGE DECKS)

722.01 DESCRIPTION.

This work shall consist of performing all work necessary to remove all bituminous material and all unsound concrete from the roadway surface of the entire bridge, or the area designated to a depth specified on the Plans or as designated by the Engineer, and replaced with specified materials.

BID ITEMS
Area Prepared for Patching.
Area Prepared for Patching (Full Depth).

722.02 CONSTRUCTION REQUIREMENTS.

(a) General (All Decks).

Traffic control shall be provided for as shown on the Plans or as directed by the Engineer. Unsound concrete and bituminous material, as shown on the Plans and/or designated by the Engineer, shall be removed to whatever depth is necessary to reach sound concrete and rust free reinforcing steel. The materials removed shall be disposed of on sites approved by the Engineer. When hydrodemolition is used as the method of removal, the areas of unsound concrete shall be determined by the Engineer after hydrodemolition has been accomplished.

The unsound concrete may be removed by hydrodemolition or by means capable of removing the required concrete, without injury to the sound concrete and reinforcing. Jack hammers or chipping hammers heavier than nominal seven kilogram class shall not be used for any partial depth concrete removal. In areas designated as full depth patching, jack hammers up to the nominal 14 kilogram class may be used to within 150 millimeters of the edges of the areas designated on the Plans or by the Engineer. Chipping hammers heavier than a nominal seven kilograms class shall not be used to remove the 150 millimeter edge unless otherwise shown on the Plans. Jack hammers and chipping tools shall be operated at an angle such that no damage to the sound concrete will occur.

(1) Reinforcing.

All scale and heavy rust shall be removed from steel bars. When the method of concrete removal is by jack hammers, wet sandblasting will not be permitted. If delays caused by

weather or other reasons occur, the Engineer may require that the cleaning be repeated. Care shall be exercised to prevent cutting, stretching, or damaging any exposed reinforcing steel. Extreme care shall be exercised to avoid breaking the bond between the reinforcing steel and concrete where bars are partially exposed yet remain anchored in sound concrete near the ends or where more than half the bar is beneath the concrete removal line. (see Figure 1.)

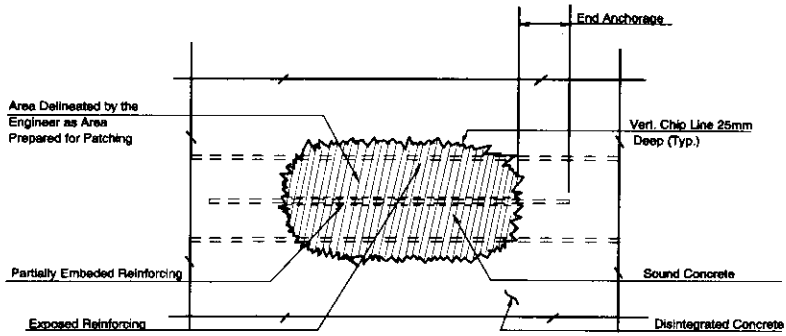

FIGURE 1

Area delineated by the Engineer
as Area Prepared for Patching

(2) Bonding of Reinforcing Steel.

(2.1) Bonding of Reinforcing Steel (top layer of transverse reinforcing bars).

Where the bond between existing concrete and the top layer of transverse reinforcing steel has been destroyed (Figure 2.) the concrete adjacent to the bar shall be removed to a depth that will permit concrete to bond to the entire periphery of the bar so exposed. A minimum of 20 millimeters clearance shall be required. A bar may be considered bonded by the Engineer even if less than 1/2 the bar depth is embedded in concrete.

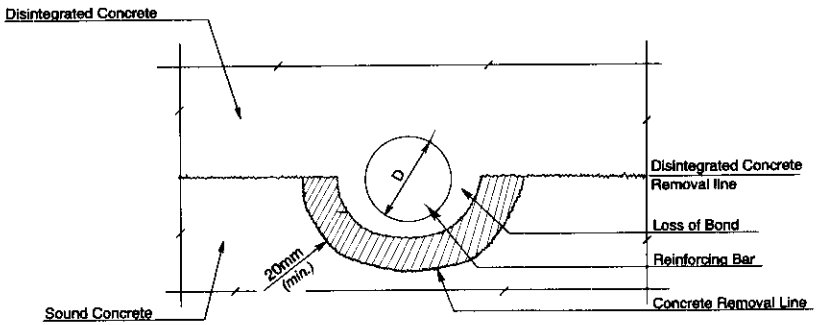

FIGURE 2.

(2.2) Bonding of Reinforcing Steel (All reinforcing bars other than the top layer of transverse bars).

Where more than half the diameter of the steel is exposed (Figure 3) or where the bond between existing concrete and the reinforcing steel has been destroyed (Figure 2) the concrete adjacent to the bars shall be removed to a depth that will permit concrete to bond to the entire periphery of the bar so exposed. A minimum of 20 millimeters clearance shall be required.

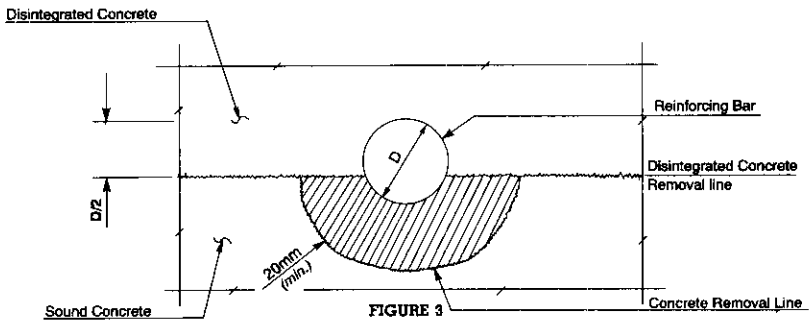

FIGURE 3

(3) Portland Cement Grout.

When grout is to be applied by methods other than spraying, the grout shall consist of a one-to-one (1:1) by mass mixture of Portland cement and Mortar Sand (FA-M) with a water/cement ratio of 0.60 by mass added to produce a "Heavy Cream" consistency. The consistency of the grout slurry shall be such that it can be applied to the existing concrete in a thin, even coating that will not run or puddle in low spots. This Portland cement grout shall be placed just prior to placement of any patching

concrete. Grout shall not be allowed to dry. The grout shall be applied to all surfaces of any partial depth patch. When hydrodemolition is used as the method of removal, the grout shall be applied by spraying, with the grout consisting of cement and water mixed to a paint consistency.

(4) Epoxy Resin.

All abutting vertical edges in full depth patches shall be coated with an epoxy resin bonding agent. The adhesive material shall be applied just prior to placement of the patching concrete in accordance with the manufacturer's recommendations.

(5) Segmental Construction.

When large scale patches in the deck result in the debonding of the reinforcing steel, they shall be patched in segments. The size and spacing of the segments shall be as shown on the Plans or as designated by the Engineer. After the initial segments have cured, the areas between the segments, if required, shall be patched. Heavy equipment, such as volumetric mixing equipment, will not be allowed on full depth patches for a minimum of 24 hours after the curing period has ended.

(b) For Bridge Decks that are to Receive an Overlay.

(1) Aggregate used for Class AAA (AE) Concrete shall comply with Section 1100 except the coarse aggregate specified for the wearing surface may be used. Slump of patching concrete shall be 65 to 90 millimeters.

(2) Placement of Patching Concrete. Partial depth areas, where loss of bond with the reinforcing steel has occurred, shall be grouted and then filled with Class AAA Concrete (AE). These patches shall cure a minimum of 24 hours prior to placing the new overlay.

(3) Partial depth patches where loss of bond with the reinforcing steel has not occurred, may be filled with AAA (AE) Concrete or with the type of concrete specified for the overlay. Partial depth patches less than 25 millimeters in depth shall be placed with the overlay. The remaining patches may be placed just after grouting and just before or as the overlay is placed unless noted otherwise on the Plans. All prepoured patches shall be filled to a level approximately six millimeters below the top of the old existing deck. Prepoured patches shall be cured a minimum of 24 hours.

(4) Curing. The minimum length of cure time after the placement of all full depth concrete patches and/or the removal of adjacent concrete on segmental patching and prior to placing

overlay shall be 48 hours when the minimum ambient air temperature during that period remains above 16°C; 72 hours when the minimum ambient air temperature remains between 5°C and 16°C; 120 hours when the minimum ambient air temperature remains between 0°C and 5°C. In special circumstances, longer cure times may be required by the Engineer. Curing of the patches shall be by wet burlap or polyethylene sheets, or at the Contractor's option, patches may be cured in accordance with subsection 701.03(h) for subdecks.

(c) For Bridge Decks That do not Receive an Overlay.

(1) Removal of Old Concrete. The unsound concrete shall be removed to the limits designated on the Plans or by the Engineer. Prior to removal, the perimeter of the patch shall be sawed to clear the reinforcing steel or as shown on the Plans. The connecting edges below the sawed portion shall be chipped out to nearly true lines. The material removed shall be disposed of on sites approved by the Engineer. This unsound concrete shall be removed without injury to the sound concrete. Final cleanup shall be accomplished with a high pressure water jet with a minimum pressure of 24 megapascals or by sandblasting methods.

(2) Coarse Aggregate. Section 1102. Except grading, which shall be as follows:

SIEVE SIZE	*PERCENTAGE RETAINED*
19 mm	0
12.5 mm	0-10
9.5 mm	15-50
2.36 mm	90-100

(3) Composition and Consistency of Concrete. Concrete shall be Class AAA (AE) in all respects and the proportions of fine and coarse aggregates shall be equal by mass. The slump shall be between 65 to 90 millimeters at the point of placement.

(4) Placing and Consolidating Concrete. Concrete shall be carefully placed by shoveling to prevent segregation. This is particularly important where new concrete meets old at centerline or other construction joints. The concrete shall be tamped into place using hand tamps with not more than 25,000 square millimeters of face. Tamping shall be preceded by insertions with a spud vibrator which shall touch the old concrete underneath.

(5) Finishing. The concrete in the patch shall be thoroughly compacted, struck off and finished with wooden floats. The surface shall receive a light brooming for final finish.

(6) Curing. As soon after completion of finishing operations, the concrete surface shall be cured by wet burlap, polyethylene sheets, or a minimum of 50 millimeters of wet sand, or at the Contractor's option, patches may be cured in accordance with subsection 701.03(h) for bridge deck wearing surfaces. The curing material shall be kept in place on the surface of the concrete for a minimum period of 72 hours unless designated otherwise by the Engineer. The burlap and sand shall be kept continuously wet during the curing period.

The curing material shall be applied as soon as possible after the finishing operation without marring the surface as directed by the Engineer.

(7) Concreting in Hot Weather. Subsection 701.03(e) concerning hot weather concreting shall apply and in addition a monomolecular film may be used to prevent rapid evaporation of water rising to the surface of the concrete. It should not be used to work up grout as an aid to finishing operations. Use of this film in no way alters the requirement for curing as provided. It is used to prevent rapid evaporation between the initial strike off and brooming prior to covering with the curing media. One or more light applications of this material may be allowed depending on the weather and sequence of consolidating and finishing operations. Monomolecular film may be used at ambient air temperatures over 20°C or when combinations of temperature, low humidity, and wind create conditions which, in the judgement of the Engineer, require hot weather procedure.

(8) Concreting in Cold Weather. Except by specific written authorization concreting operations shall not be continued when a descending ambient air temperature falls below 7° C, nor shall operations be started or resumed until an ascending ambient air temperature reaches 5° C.

722.03 METHOD OF MEASUREMENT.

The "Area Prepared for Patching", shall be determined by the Engineer after any asphaltic concrete overlay and the designated thickness of Portland cement concrete surface has been removed. The "Area Prepared for Patching" and "Area Prepared for Patching (Full Depth)" shall be measured by the square meter to the nearest 0.1 square meter. On bridges that are to receive an overlay, the pay quantity shall be the areas that require prepoured patching concrete. Full depth patching shall be measured prior to placement of patching concrete. Partial depth patching shall be measured after the patching concrete has been placed.

722.04 BASIS OF PAYMENT.

The amount of completed and accepted work, measured as provided above, shall be paid for at the Contract unit price per square meter for "Area Prepared for Patching" and "Area Prepared for Patching (Full Depth)" when shown as a Contract item. When no Contract item is shown for "Area Prepared for Patching (Full Depth)" and upon approval of the Engineer, areas prepared for patching that are full depth which require forming on the under side shall be paid for at a rate of 2¼ times the Contract unit price per square meter for "Area Prepared for Patching".

These payments shall include removing of unsound concrete and bituminous patches, sand blasting steel where needed, preparing the entire area of the deck for overlay including the patching of the deck, or only patching of the deck (whichever is applicable). The Contract price shall be full compensation for furnishing all labor, equipment, tools and incidentals necessary to complete the work. The Contract unit price shall govern for "Area Prepared for Patching" and "Area Prepared for Patching (Full Depth)" regardless of the amount of overruns or underruns.

Bars severely damaged or broken by the Contractor due to neglect shall be replaced at his own expense as directed by the Engineer. Other bars that require replacement shall be replaced and paid for as kilograms of "Reinforcing Steel". The price per kilogram to be paid shall be the set price as shown on the Contract.

Concrete used to fill patched areas shall be subsidiary to other items of the Contract.

SECTION 723

MACHINE PREPARATION (EXISTING CONCRETE BRIDGE DECKS)

723.01 DESCRIPTION.

This work shall consist of preparing the bridge deck surface for an overlay by removing the concrete and bituminous material from the roadway surface of the entire bridge deck and approaches to the depth and in accordance with the details shown on the Plans.

BID ITEMS

Machine Preparation (*).

* Denotes Thickness

723.02 CONSTRUCTION REQUIREMENTS.

(a) Work Sequence.

Traffic Control shall be provided for as shown on the Plans or as directed by the Engineer.

(b) Removal of Old Concrete.

Concrete shall be removed from the existing surface to a depth specified on the Plans over the entire area of the deck by means of a milling or cutting procedure capable of removing the required concrete, without injury to the sound concrete.

723.03 METHOD OF MEASUREMENT.

Machine Preparation, shall be measured by the square meter to the nearest 0.1 square meter.

723.04 BASIS OF PAYMENT.

The amount of completed and accepted work, measured as provided above, shall be paid for at the Contract unit price per square meter for "Machine Preparation", which shall include removal of the concrete roadway surface of the entire bridge, unless shown otherwise on the Plans, and to the depth shown on the Plans.

Prices shall be full compensation for removal of all existing surfacing on the bridge deck, such as overlays, slurry seals, etc., and for all labor, equipment, tools and incidentals necessary to complete the work.

Milling of the approaches shall be in accordance with details shown on the Plans and shall be subsidiary to other items of the Contract.

The quantities for "Machine Preparation" for which payment will be made shall be the quantities shown on the Plans provided the project is constructed essentially to the lines and grades shown on the Plans.

When the Plans have been altered or disagreement exists between the Contractor and the Engineer as to accuracy of Plan quantities, either party shall have the right to request and cause the quantities involved to be measured in accordance with measured quantities.

SECTION 724

HYDRODEMOLITION

724.01 DESCRIPTION.

This work shall consist of preparing the concrete surface for patching and overlay by removing concrete and asphalt from the roadway surface to the limits designated on the Plans.

BID ITEM
Hydrodemolition.

724.02 CONSTRUCTION REQUIREMENTS.

(a) General.

The concrete and asphalt shall be removed by a machine that produces a high pressure water blast which will remove concrete, asphalt, oil, dirt, concrete laitance and rust from the exposed reinforcing bars by direct impact. Rotary milling or mechanical abrading machines will not be allowed when this type of work is specified.

The machine shall be capable of producing a water jet through an orifice at a pressure of at least 117 megapascals. The machine shall move the jet transversely across the area and forward or backward so that the entire deck is covered with the water jet and operated at a pressure sufficient to remove the unsound concrete. Hand held wands will not be allowed except at inaccessible areas adjacent to the curb and small patch areas.

The machine shall have sufficient means to control and vary the following functions of the machine:

(1) Water pressure.

(2) Angle and distance of the orifice in relation to the surface to be blasted.

(3) Limits of transverse and longitudinal movement of the orifice.

(4) Speed of the orifice in the transverse and longitudinal direction.

(b) Limits of Removal.

The machine shall be adjusted so that the approximate depth of concrete removal as shown on the Plans is removed from the deck. In areas of unsound concrete, the water jet shall remove all unsound concrete. The depth of the removal shall be

limited so that no sound concrete below the upper surface of the transverse layer of reinforcing steel will be removed.

When large areas of the deck on composite bridges are removed resulting in the debonding of the main stress carrying longitudinal reinforcing bars, the removal shall be performed in stages to comply with the construction sequence shown on the Plans or directed by the Engineer.

(c) Calibration of the Machine.

The following procedure shall be used to check the machine to assure that the correct amount of unsound concrete is removed. The Engineer will locate and record the limits of a test area of unsound concrete. The machine will then go over the test area in a normal operating manner as described under subsection 724.02(b). The area where the top layer of reinforcing bars have been debonded, and a deck patch is required, will then be measured by the Engineer. If the area requiring a deck patch is 15 percent greater than the initial test area previously measured and recorded by the Engineer, the machine shall be adjusted so that the area removed is within the 15 percent tolerance.

(d) Control of Debris and Water.

The water jet shall be shielded so that the water and broken concrete will not be a hazard to workers or traffic. The water will be drained from the bridge so that excess water will not accumulate on the bridge. The water will be drained off the bridge in a manner that will not damage areas adjacent to or below the bridge. The broken concrete and asphalt shall be disposed of on sites selected by the Contractor and approved by the Engineer.

724.03 METHOD OF MEASUREMENT.

Hydrodemolition shall be measured by the square meter to the nearest 0.1 square meter.

724.04 BASIS OF PAYMENT.

The amount of completed and accepted work, measured as provided above, shall be paid for at the contract unit price per square meter for "Hydrodemolition", which shall include removal and disposal of the roadway surface as designated.

Prices shall be full compensation for all labor, equipment, tools and incidentals necessary to complete the work.

The quantities for "Hydrodemolition" for which payment will be made shall be the quantities shown on the Plans provided the project is constructed essentially to the lines and grade shown on the Plans.

When the Plans have been altered or disagreement exists between the Contractor and the Engineer as to accuracy of Plan quantities, either party shall have the right to request and cause the quantities to be measured.

SECTION 725

REPAIRS (STRUCTURES)

725.01 DESCRIPTION.

This item shall consist of repairing the designated portion of the structure in accordance with the details, procedures and provisions shown on the Plans or as directed by the Engineer.

BID ITEM:
(*) Repair.
(*) Type as shown on Plans.

725.02 MATERIALS.

All new materials remaining permanently in the structure as indicated on the Plans shall conform to the requirements of the Materials Division.

725.03 CONSTRUCTION REQUIREMENTS.

The portion(s) to be repaired, as indicated on the Plans, shall be checked for stability and soundness and any surfaces showing cracks or loose concrete shall be repaired as shown by Plan details and as directed by the Engineer. When the repair, as shown on the Plans, requires the superstructure to be raised and supported on falsework, the new repairs shall be allowed to cure in accordance with subsections 701.03(d) and 701.03(h) or revised by Plan note before the superstructure is reset.

The old concrete shall be removed to the approximate limits as shown on the Plans or as directed by the Engineer. Care shall be taken to prevent damage to the concrete that is to remain in place. Broken concrete shall be disposed of as approved by the Engineer.

Concrete or epoxy grout of the class or mixture shown on the Plans shall be used for repairing the designated areas.

Concrete adhesive, when specified on the Plans shall be applied to old surfaces prior to placing new concrete.

The existing reinforcing steel that is exposed after removing the old concrete shall be cleaned before new concrete is placed. New reinforcing steel shall be placed as shown on the Plans.

Any damage to the existing structure due to the negligence on the part of the Contractor shall be repaired to the satisfaction of the Engineer at the Contractor's expense.

725.04 METHOD OF MEASUREMENT.

Each separate item repaired shall be the unit of measurement as shown on the Plans.

New reinforcement steel placed in accordance with the Plan details shall not be measured separately for payment but shall be considered as subsidiary to the various items of (*) Repair.

725.05 BASIS OF PAYMENT.

The amount of completed and accepted work measured as provided above, shall be paid for at the Contract unit price for "(*) Repair", of the various types, which price shall be full compensation for removal and disposal of concrete, reinforcing steel when required, furnishing all materials and for all labor, equipment, tools and incidentals necessary to complete the work.

SECTION 726

PERMANENT STEEL DECK FORMS

726.01 DESCRIPTION.

This work shall consist of an approved type of permanent steel deck forms, complying with the requirements shown on the Plans and outlined in the following specifications and may be used in lieu of conventional removable forms, when designated on the Plans, for forming the roadway slab between the exterior beams or girders.

726.02 MATERIALS.

All materials shall conform to the requirements provided in the Materials Division.

Permanent Steel Deck Forms ..... Section 1600

726.03 CONSTRUCTION REQUIREMENTS.

Care and protection shall be given the metal form sheets, supports and accessory items during handling, shipping and storage. During loading, hoisting and unloading operations, extra precaution and care shall be taken to prevent damage to ends, corners, and edges of the form sheets, supports and accessory items. If the form units and accessories are to be stored prior to installation, they shall not be placed in contact with the ground and the material shall be adequately covered or protected.

The support hangers shall be the non-welded support system. No welding is to be permitted to any of the structural steel members. Field variations will require the support angle to be field welded to the continuous edge angle and to the support strap across the structural steel flange. Close inspection will be used to make sure no weld is made to the structural steel or in such a manner as to induce local heat spots on the structural steel.

When permanent steel deck forms are to be used on concrete girder bridges, the method of attachment must be approved by the Engineer prior to fabrication of the girders.

Seven copies of shop drawings (maximum size 560 × 915 mm) shall be submitted to the Engineer for the permanent steel deck forms which include the material and dimension details, and

the Contractor's erection procedures. Shop drawings shall be approved before erection of forms.

Form sheets shall not be permitted to rest directly on the flanges.

They shall be securely fastened to form supports by self-tapping screws and shall have a minimum bearing length of 25 millimeters at each end. Transverse deck slab construction joints shall be located at the bottom of a flute and six millimeter weep holes shall be field drilled at not less than 300 millimeters on centers along the line of the joint.

Screed supports shall not be located directly on the form sheets, form supports or reinforcing steel. No loose sheets or miscellaneous hardware shall be left on the structural slab at the end of the working day. Metal forms shall not be used where longitudinal slab construction joints are located between stringers, nor shall they be used on the overhang.

The corrugated metal sheets shall be fabricated for the placement sequence used with the joints between sections of sheets overlapped or securely fastened to eliminate differential deflections between sections. The ends of each piece shall be closed. Preclosed (tapered) ends or separate end closures may be used.

Any permanently exposed form metal where the galvanized coating has been damaged shall be thoroughly cleaned, wire brushed and painted with two coats of organic zinc rich paint as specified in Section 1810, no color added, to the satisfaction of the Engineer. Minor heat discoloration in areas of welds need not be touched up. Any sheets damaged after setting and prior to placing concrete shall be removed and replaced.

All reinforcement shall have a minimum concrete cover as specified on the Plans. Bars in the bottom layer of the main reinforcement shall be centered over the valleys of the form when necessary to achieve the minimum cover. The distance from the top of the slab to the bottom layer of main slab reinforcement shall be not less than that shown on the Plans. Provision shall be made for positive material support of the concrete slab by the steel beam or girder top flanges in compression except where shear connectors are provided. The Engineer will spot check the underside for soundness. At the Engineer's discretion, form removal may be required to perform a visual inspection for soundness or surface irregularities.

726.04 BASIS OF PAYMENT.

The pay quantity of concrete in the bridge slabs shall be computed from the nominal dimensions shown on the Plans

with no allowance for metal form deflections or corrugations. No direct payment will be made for the permanent steel deck forms. The cost of the deck forms and any additional concrete provided will be subsidiary to the concrete in the bridge slab.

SECTION 727

ELASTOMERIC COMPRESSION SEAL

727.01 DESCRIPTION.

This work covers the materials for and the installation of open-cell compression type neoprene joint seals and lubricant-adhesive to be used for sealing the expansion joints in concrete bridge decks.

BID ITEM
Elastomeric Compression Seal.

727.02 MATERIALS.

Materials shall conform to the requirements specified in the Materials Division.

Preformed Elastomeric Compression Joint Seals for Concrete ..... Section 1500

727.03 CONSTRUCTION REQUIREMENTS.

(a) Formwork Preparation.

At the ends of the bridge deck and the adjacent face of the abutment backwall, an indentation shall be formed in the concrete to the size and shape shown on the Plans. The formed indentation shall be of uniform depth and width and be free of irregularities.

(b) Joint Installation.

The neoprene joint material across the roadway shall be fabricated in one section at each location and shall be trimmed at the ends.

Prior to installing the neoprene joint seals, the surfaces of the indentation formed for the neoprene joint material shall be thoroughly cleaned and swabbed with a uniform coating of the lubricant-adhesive.

The neoprene joint material shall be installed according to manufacture's recommendations, as approved by the Engineer, with equipment capable of placing the strips at the specified depth without increasing or decreasing the length as taken from the roll or box by more than five percent.

The top of the installed joint material shall be recessed a minimum of three millimeters and a maximum of ten milli-

meters below the top of the roadway deck adjacent to the joint material.

727.04 METHOD OF MEASUREMENT.

Elastomeric Compression Seal shall be measured by the meter, in place. Lubricant-adhesive will not be measured separately, but the cost of furnishing and placing this material shall be included in the cost of the neoprene joint material.

727.05 BASIS OF PAYMENT.

The amount of completed and accepted work measured as provided above, shall be paid for at the Contract unit price per meter for "Elastomeric Compression Seal", which price shall be full compensation for furnishing all required materials, including armoring when shown, for placing all materials and for all labor, tools, equipment and incidentals necessary to complete the work.

SECTION 728

SUBSTRUCTURE WATERPROOFING MEMBRANE

728.01 DESCRIPTION.

This work shall consist of the application of an epoxy primer and a mastic to areas of the substructure designated on the Plans.

BID ITEMS
Substructure Waterproofing Membrane.

728.02 MATERIALS.

All materials shall conform to the requirements provided in the Materials Division.

Primer	Section 1700
Mastic	Section 1700

728.03 CONSTRUCTION REQUIREMENTS.

The waterproofing membrane shall be applied according to the manufacturer's recommendations and as approved by the Engineer.

All surfaces which are to be waterproofed shall be thoroughly cleaned.

The membrane shall be applied to obtain one millimeter minimum dry film thickness on the bridge seat to the limits shown on the Plans. The membrane shall be applied to promote adequate drainage of the bridge seats and to fill any low areas that may retain moisture. Average coverage should be approximately 1.5 liters per square meter.

728.04 METHOD OF MEASUREMENT.

This work shall be measured by the unit as shown on the Plans.

728.05 BASIS OF PAYMENT.

The amount of completed and accepted work, measured as provided above, shall be paid for at the contract unit price for "Substructure Waterproofing Membrane" and shall be full compensation for all labor, equipment, tools, materials and incidentals necessary to complete the work.

SECTION 729

COAL-TAR MEMBRANE PROTECTIVE COAT

729.01 DESCRIPTION.

This work shall consist of the application of a coal-tar emulsion coating with a single ply of fiber glass fabric membrane to the concrete face of the abutment in contact with the backfill of the bridge.

BID ITEM
Coal-Tar Membrane Protective Coat.

729.02 MATERIALS.

All materials shall conform to the requirements provided in the Materials Division.

Fiber Glass Fabric	Section 1700
Coal-Tar Emulsion	Section 1700
Penetrating Primer	Section 1700

729.03 CONSTRUCTION REQUIREMENTS.

All methods employed in performing the work and all equipment, tools and machinery used for handling materials and executing any part of the work shall be subject to approval of the Engineer before the work is started and, whenever found unsatisfactory, shall be changed and improved as required. All equipment, tools, machinery and containers used must be kept clean and maintained in a satisfactory condition.

Mixing and agitating equipment furnished shall be either a portable power mixer or a tank type power mixer. A portable mixer for use in drums shall have sufficient power and impeller blades shaped to thoroughly mix and pull the material upward from the bottom of the drum. Mixing in tanks may be done in round-bottom tanks equipped with a power driven mixer of sufficient capacity to maintain the emulsion in suspension.

All concrete surfaces which are to be covered shall be thoroughly cleaned to remove dirt and laitance.

(a) Application of Primer.

The penetrating primer shall be applied by brushing or spraying, preferably with high pressure hydraulic equipment using hand-held spray bars that permit close control of quantity applied. Applied at the rate of approximately 50 milliliters

per square meter, the quantity shall be controlled to produce a "brown coat", filling all pores and depressions but devoid of lakes or pools showing a solid film when dried out. The purpose of the primer is to neutralize the concrete surface and not to produce a membrane film by itself. Primer shall not be diluted unless ordered by the Engineer. Surfaces shall be dry when primer is applied, and the weather and atmospheric conditions favorable for a drying period of at least four hours. Care shall be taken that the primer does not flow onto nor is applied over bituminous or mastic materials.

The primer shall cure for 24 hours before the Coal-Tar Emulsion and Fiber-Glass Fabric is applied.

(b) Application of Coal-Tar Emulsion and Fiber-Glass Fabric.

Due to the settling that may take place in transit, the emulsion shall be thoroughly agitated by power mixers so that a homogeneous consistency is assured for proper and uniform application.

The emulsion shall not be applied when the weather is foggy, when rain threatens or when the ambient air and/or concrete temperature is below 7°C.

The emulsion shall be applied by brushing or spraying, preferably with high pressure hydraulic equipment using hand-held spray bars that permit close control of the quantity applied. The application rate shall be in the amount of 800 to 900 milliliters for each of two applications for a total application of 1.6 to 1.8 liters per square meter. After the first application, one width of Fiber-Glass Fabric shall be laid loosely into the coat of emulsion parallel to the horizontal dimension of the abutment while the film is still wet. The fabric shall be brushed into the emulsion thereby eliminating all wrinkles and blisters, but without stretching the fabric tight. The adjoining widths of fabric shall be installed in the same fashion, side lapping the former by 75 millimeters. All end laps shall be at least 300 millimeters. The second coat of emulsion shall be applied after allowing time for proper setting of the first coat. The complete membrane shall be allowed to cure for at least 24 hours before being covered with backfill material.

729.04 METHOD OF MEASUREMENT.

The area of Coal-Tar Membrane Protective Coat shall be measured and computed to the nearest unit as shown on the Plans. Payment may be made for the quantity shown on the Plans provided the project is constructed essentially to the de-

tails shown on the Plans. When the Plans have been altered or when disagreement exists between the Contractor and the Engineer as to the accuracy of the plan quantities, either party shall have the right to request and cause the quantities involved to be measured.

729.05 BASIS OF PAYMENT.

Coal-Tar Membrane Protective Coat, measured as provided above, shall be paid for at the contract unit price for "Coal-Tar Membrane Protective Coat", which price shall be full compensation for furnishing all materials, and for all labor, equipment, tools, and incidentals necessary to complete the work.