TABLE OF CONTENTS

DIVISION 800
INCIDENTAL CONSTRUCTION

SECTION	PAGE
801 – MOBILIZATION	800-1
802 – CONTRACTOR CONSTRUCTION STAKING	800-2
803 – FIELD OFFICE AND LABORATORY	800-7
804 – MAINTENANCE AND RESTORATION OF HAUL ROADS	800-10
805 – WORK ZONE TRAFFIC CONTROL AND SAFETY	800-11
806 – DURABLE PAVEMENT MARKING	800-19
807 – PAINTED PAVEMENT MARKING	800-23
808 – REMOVAL OF EXISTING PAVEMENT MARKINGS	800-25
809 – CONCRETE SAFETY BARRIER	800-26
810 – INERTIAL BARRIER SYSTEM	800-28
811 – IMPACT ATTENUATOR	800-29
812 – PERMANENT SIGNING	800-30
813 – RUMBLE STRIPS (MILLED) AND RUMBLE STRIPS (MILLED) (CENTERLINE)	800-35
814 – ELECTRIC LIGHTING SYSTEMS AND TRAFFIC SIGNALS	800-36
815 – CATCH BASINS, INLETS, OUTLETS, MANHOLES, JUNCTION BOXES AND OTHER EXISTING STRUCTURES	800-40
816 – ADJUSTMENT OF INLETS, MANHOLES AND OTHER EXISTING STRUCTURES	800-42
817 – PIPE CULVERTS, EROSION PIPE, STORM SEWERS, SANITARY SEWERS AND END SECTIONS	800-43
818 – ENCASEMENT PIPE	800-49
819 – BORED, JACKED OR TUNNELED PIPE	800-50
820 – FLUME INLETS AND SLOPE DRAINS	800-52
821 – FLAPGATES	800-53
822 – UNDERDRAINS	800-54
823 – PREFABRICATED INTERCEPTION DEVICES AND SLOTTED DRAINS	800-57
824 – CONCRETE SIDEWALK, STEPS AND RAMPS	800-58
825 – CURB AND GUTTER	800-61
826 – SHOT-CRETE CONCRETE	800-64
827 – GUARDRAIL AND GUIDEPOSTS	800-65
828 – FENCING	800-67
829 – RIPRAP	800-71
830 – SLOPE PROTECTION	800-72
831 – DITCH LINING	800-74
832 – GABIONS	800-76
833 – PAVEMENT PATCHING	800-77
834 – UNDERSEALING	800-80
835 – RESEALING JOINTS AND SEALING CRACKS IN EXISTING PCCP AND HMA PAVEMENTS	800-82
836 – SURFACING FOR SIDE ROADS AND ENTRANCES	800-86
837 – PAVEMENT WIDENING, SHOULDERING AND PAVEMENT EDGE WEDGE FOR HMA OVERLAY PROJECTS	800-87
838 – GRINDING REHAB CONCRETE PAVEMENT	800-89
839 – RUBBLIZING PORTLAND CEMENT CONCRETE PAVEMENT	800-90
840 – TEMPORARY SURFACING	800-92
841 – LIGHT TYPE SURFACING	800-93
842 – DRILLING AND GROUTING	800-94
843 – FLOWABLE FILL	800-96
844 – SLURRY GROUT	800-98
845 – CLEANING EXISTING STRUCTURES AND UNDERDRAINS	800-100
846 – TRANSPORTING SALVAGEABLE MATERIAL	800-102
847 – MAILBOX ADJUSTMENTS	800-103

SECTION 801

MOBILIZATION

801.1 DESCRIPTION

Move required personnel, equipment, materials, supplies and incidentals to the project site prior to beginning work. Include other work and costs incurred before the project starts.

BID ITEMS	UNITS
Mobilization	Lump Sum
Mobilization (DBE)	Lump Sum

The bid item "Mobilization (DBE)" is only used on Federal Aid Projects having a DBE Goal set by KDOT. This bid item gives the Contractor the option to provide funds for mobilization to DBE subcontractors.

If the Contractor elects not to utilize the bid item "Mobilization (DBE)", a unit price of $0.00 is an acceptable bid for this item.

801.2 MATERIALS - None specified.

801.3 CONSTRUCTION REQUIREMENTS - None specified.

801.4 MEASUREMENT AND PAYMENT

a. Mobilization. The Engineer will make partial payments according to **TABLE 801-1**.

TABLE 801-1: MOBILIZATION PARTIAL PAYMENTS

Percent of Original Contract Amount Completed	Pay Lesser of the Two	
	% of Mobilization	% of Original Contract Amount
5	25	2.5
10	50	5
25	60	7.5
50	100	10
Accepted	100	NA

The Percent of Original Contract Amount Completed = the amount earned by the Contractor* divided by the total dollar value of the original contract (all bid items).

*Do not include monies earned for "Mobilization", "Traffic Control (Lump Sum)", "Contractor Construction Staking" and "Stored Materials".

b. Mobilization (DBE). On behalf of the DBE subcontractor(s), submit to the Engineer a written request for partial payment of this item. Requests may be made 30 days in advance of the DBE subcontractor beginning work or mobilizing. Limit the amount requested to the amount of mobilization necessary for the work that will begin within 45 days of the request. Make additional requests at appropriate times until 100% of this item is paid.

The Contractor is required to pay the DBE subcontractor the requested amount of partial payment for this item, no later than 5 days after the DBE begins mobilizing or work.

Payment for "Mobilization" and "Mobilization (DBE)" at the contract unit is full compensation for the specified work.

SECTION 802

CONTRACTOR CONSTRUCTION STAKING

802.1 DESCRIPTION

Provide land surveying and construction surveying services and set right-of-way survey monuments according to the Contract Documents, KDOT's Construction Manual and consistent with standard surveying practices.

BID ITEMS	UNITS
Contractor Construction Staking	Lump Sum
Right-of-Way Survey Monument	Each
Benchmark Monument (Concrete Cylinder)	Each
Monument Box	Each

802.2 MATERIALS

a. General. Provide the necessary materials to complete the specified surveying services. Provide materials and equipment that comply with the current requirements of the Kansas Statutes, Kansas State Board of Technical Profession's Regulations and the Contract Documents.

b. Benchmark Discs. Provide standard manufacture 2 inch diameter, domed, metal (either brass or bronze) survey monuments to be set in concrete. Factory stamp the discs as shown:

Refer to **subsection 802.3.c.(5)** for individual stamping requirements.

c. Concrete. Use commercial grade concrete that complies with **DIVISION 400**.

Volumetric proportioning and hand mixing of concrete is permitted for concrete footings where small quantities are required.

d. Miscellaneous Materials. Provide the following miscellaneous materials:

- Commercially available steel posts that comply with the physical requirements for steel delineator posts, **DIVISION 1600**;
- 3 inch x 8 inch x 16 gage metal sign blanks;
- Commercially available galvanized 2 inch x 5/16 inch bolts, with 2 flat washers, 1 lock washer and 1 nut per bolt;
- Commercially available ⅝ inch x 30 inch reinforcing steel bars (non-coated); and
- Other miscellaneous materials for R/W Survey Monuments detailed in the Contract Documents.

e. Monument Box. Provide a monument box of the brand and type of the type shown in the Contract Documents.

f. Acceptance of Materials. The Engineer will accept materials for the specified surveying services, right-of-way survey monuments, miscellaneous materials and monument boxes based on compliance with dimensional and other specified requirements and visual inspection for condition.

802.3 CONSTRUCTION REQUIREMENTS

a. General.

(1) With the Engineer's approval, the Contractor's surveying operations may begin after the contract is signed, but prior to issuing the Notice to Proceed.

(2) Surveying Personnel. Before performing any surveying operations on the project, inform the Engineer of the Contractor's personnel responsible for land surveying, construction surveying and staking. Provide a Land Surveyor, trained and experienced in the construction staking and licensed by the Kansas State Board of Technical Professions according to Kansas Statutes to perform the required land surveys, the setting of all section corners, right-of-way survey monuments and reference point monuments set on the right-of way lines.

(3) Provide surveying equipment that complies with the following tolerances:

- Slope Staking: Horizontal and Vertical tolerance of ± 0.10 feet (per KDOT Construction Manual - Cross Sections 3.06.02). Use a GPS system, a Total Station, or a Level & Transit.
- Finish Staking: (grade hubs, string lines etc.) and Structures: Horizontal = ± 0.05 feet; Vertical = ± 0.01 feet (per KDOT Construction Manual - Finishing Stakes 3.09.01 and 3.09.02). For Horizontal, use a GPS system or a Total Station. For Vertical, use a Level.
- Critical Bridge Member Staking: Horizontal = ± 0.02 feet; Vertical = ± 0.01 feet (Vertical as per Construction Manual - Finishing Stakes 3.09.01 and 3.09.02). For Horizontal, use a GPS system or a Total Station. For Vertical, use a Level. See **subsection 802.3c.(2)** for Critical Bridge Member Staking.
- Right of Way Survey Monuments: For relative precision of all R/W Survey Monuments, comply with the precision expressed in the Kansas Minimum Standards for Boundary Surveys from the project coordinate data. Use a GPS system or Total Station.
- Project Control Points: The relative precision of any project control point ± 0.05 feet from the project coordinate data. Use a GPS system or Total Station.
- Field Notes: For all land surveying and construction staking, record 2 measurements for verification in the field notes for all PLSS corners and all project control points.
- GPS equipment: Take 2 GPS measurements at a minimum interval of 2 hours with the base station at 1 or 2 project control points. Include in the field survey notebooks a copy of the site calibration. The site calibration includes an area extending a minimum of 200 feet beyond the beginning and ending of the project and the construction limits furthest offset to the left and right of the project centerline. Take a minimum of 4 calibration points or as directed by the Engineer. Use the sum of the maximum residual of the site calibration and the delta of the point being staked.
- Total Stations: To verify the tolerances, record total station measurements from 2 project control points (set-up or backsight) to the point being established. Use the average of the 2 resulting coordinate values for the point being staked for the specified tolerances.
- Levels: Record in the field notes a turn through each project benchmark as they are encountered during staking activities (per KDOT Construction Manual - Elevations 3.23.05).

(4) Before proceeding with the field surveys, provide the Engineer with a written report of any errors or apparent discrepancies found in previous surveys or the Contract Documents. The Engineer will provide the corrections or necessary interpretations.

Correct any deficient engineering layout or construction work that is the result of inaccuracies in the Contractor's surveys or staking operations, or the failure to report inaccuracies found in the work previously done by KDOT, at no additional cost to KDOT.

(5) The Engineer will perform final checks, measurements and surveys involving the determination of any pay quantities. The Engineer may check the accuracy and control of the Contractor's construction staking at any time throughout the duration of the project.

b. Land Surveying.

(1) Before any construction activity starts in the immediate area of an endangered Public Land Survey System (PLSS) corner, recover all endangered section corners and accessories of the PLSS on the project. Endangered PLSS corners are those as defined by Kansas Statutes and/or shown in the Contract Documents as lying within the range from the project centerline to a distance 100 feet outside the construction limits, throughout the length of the project. Establish a minimum of 6 reference ties for each endangered PLSS corner. Each reference tie shall be a direct measurement to a precise (hard defined) point. Specify slope or horizontal measurement.

Complete a Land Survey Reference Report marked as a "Notice of Endangerment Activity" for each endangered PLSS corner. File the reports with the appropriate governmental custodian responsible for maintaining those records, as required by Kansas Statutes. Provide the Engineer with copies of the completed reports.

(2) Before any construction activity starts in the immediate area, clearly establish the right-of-way as shown in the Contract Documents. If the R/W Survey Monuments are set initially, determine each monument's position with the project coordinates, project stationing and offset. Provide the Engineer with a written report of each monument's position for each R/W Survey Monument set supplementary to those shown in the Contract Documents including additional monuments, monuments requested by the Engineer and monuments offset near obstructions.

(3) Recover and verify, or reset all of the PLSS corners previously reported as endangered PLSS corners. Verify the top of all PLSS corners monuments are ¼ to ½ inch below the finish grade on concrete pavement and 4 to 6 inches below the finish grade on asphalt pavement. Establish a minimum of 6 reference ties for each of the PLSS corners. Each reference tie shall be a direct measurement to a precise (hard defined) point. Specify slope or horizontal measurement.

Complete a Land Survey Reference Report marked as a Notice of Completion of Endangerment Activity and Report of Restoration for each restored PLSS corner previously reported as endangered. File the reports with the appropriate governmental custodian responsible for maintaining those records, as required by Kansas Statutes. Provide the Engineer with copies of the completed reports.

(4) Before the completion of project construction, set all of the R/W Survey Monuments shown in the Contract Documents. If the R/W Survey Monuments were set initially, visually inspect each R/W Survey Monument to determine if it was either disturbed or destroyed. Reset all of the R/W Survey Monuments that are determined as disturbed or destroyed, at no cost to KDOT. Determine each reset monument's position with both the project coordinates and the project stationing and offset. Provide the Engineer with a written report of all right-of-way survey monuments set.

c. Construction Surveying and Staking.

(1) General.

- Check alignment and reference or re-reference all necessary control points.
- Establish or re-establish project centerline.
- Run a level circuit to check or re-establish plan benchmarks; set other benchmarks as needed.
- Take original cross-sections that are not incorporated in the plans.
- Stake or re-stake right-of-way where needed (to be done by a Licensed Professional Land Surveyor).
- Perform all construction layout and reference staking necessary for the proper control and satisfactory completion of all structures, grading, paving, drainage and all other appurtenances required for the completion of the work and acceptance of the project.

(2) Bridge. Set project control points (alignment and elevation references and offsets for abutments and pier bents) under the supervision of a Licensed Professional Land Surveyor. A Licensed Professional Land Surveyor will perform an independent check of the initial survey. The Contractor may stake the control points for critical bridge elements including, but not limited to piling, drilled shafts, and spread footings. A different Licensed Professional Land Surveyor (from either the same surveying company or another surveying company) will check the accuracy of the location of the control points for critical bridge elements. Resolve discrepancies before constructing the bridge elements. After the critical bridge elements have been constructed, the Licensed Professional Land Surveyor who checked the Contractor will verify the locations and elevations of the critical bridge elements. The original survey and the check survey shall agree within the tolerances for that bridge element allowed in the Contract Documents. Report any discrepancies in excess of the tolerances to the Engineer.

(3) Documentation. Provide and maintain a current copy of all field survey notebooks at the project site at all times. Produce the original field survey notebooks for inspection upon request by the Engineer. Include a detailed list of any abbreviations, codes, formatting or other nomenclature contained in the notebooks to facilitate clarity of the notes. Provide either one or a combination of both of the following types of notes, as directed by the Engineer:

- Provide standard, bound field notebooks where the handwritten field notes are indexed and kept in a clear, orderly and neat manner consistent with standard surveying practices and according to KDOT's procedures.

- Provide a legible ASCII file for electronic field notes where the "theoretical (calculated) point" can be checked against the "established point" set in the field. This method allows for a check of the inverse distance and direction for error tolerance. This procedure should be utilized for points with elevations. Before any construction staking begins, the procedures for all electronic field notes must be approved by the Engineer.

(4) Monuments. Upon completion of the surfacing, recover and verify or reset all of the field survey monuments (such as P.I.'s, P.O.T.'s, P.C.'s, P.T.'s, P.O.S.T.'s,) on the project centerlines or baselines, as shown in the Contract Documents. Verify that the top of the field survey monuments are set a maximum of ½ inch below the finish grade on concrete pavement, or a maximum of 6 inches below the finish grade on asphalt pavement. Verify the accuracy of the locations of all field survey monuments versus those of the project centerlines or baselines shown in the Contract Documents. Establish a minimum of 4 reference ties for each of the field survey monuments on the project centerlines or baselines.

(5) Reports. Provide a written report to the Engineer indicating the descriptions of all field survey monuments and their 4 reference ties, regardless if the information in the Contract Documents was revised or not. Include in the report "station calls" for each of the field survey monuments (such as P.I.'s, P.O.T.'s, P.C.'s, P.T.'s, P.O.S.T.'s) on the project centerlines or baselines shown in the Contract Documents.

Recover and verify all of the project benchmarks shown in the Contract Documents. Establish permanent replacement benchmarks for all project benchmarks that were destroyed during the construction using one of these methods:

- A benchmark disc "set in place" on new concrete structure.
- A benchmark disc "drilled and grouted" on existing concrete structure.
- A benchmark disc set in the top of a reinforced concrete cylinder (6 inch diameter x 4 foot depth into the ground, minimum) cast in place.
- As directed by the Engineer.

Stamp the benchmark caps with the "Project Number" and the permanent replacement benchmark number as a letter designation following the benchmark it is replacing (i.e.: destroyed BM #21 is replaced by BM #21A). Without exception verify that the maximum spacing between benchmarks is a maximum of 30 feet in vertical difference, 500 feet in horizontal distance in urban areas or 1500 feet in horizontal distance in rural areas.

Provide the Engineer with a written report of all post project benchmarks, listing the benchmark number, elevation, project stationing and offset, and a complete description of the monument type and its physical location. Include in the report, all of the remaining benchmarks shown in the Contract Documents, the permanent replacement benchmarks and the remaining additional "construction benchmarks" used for the staking of the project. Do not include in the report any "temporary benchmarks" used for the construction staking of the project that are classified as "temporary" or "degradable" in nature.

d. Right-of-Way Survey Monuments. Set all right-of-way survey monuments on and along the KDOT right-of-way lines at these locations:

- All P.I. locations along normal/tangent sections.
- All P.C. and P.T. locations along curved sections.
- At an offset where a physical obstruction impedes the exact location.

Set all Reference Point monuments on and along KDOT right-of-way at these locations:

- At points a maximum of 1320 feet apart where the right-of-way is straight, or on a continuous horizontal curve of constant radius.
- At the crest of a sharp hill or the shoulders of a large/rounded hill.
- At radial/perpendicular lines to all horizontal changes in the project centerline alignment (i.e., P.C. and P.T. offsets).
- As directed by the Engineer.

Set all right-of-way survey monuments according to the Contract Documents.

Fasten the R/W sign to the witness post in this sequence: bolt, flat washer, sign, post, flat washer, lock washer and nut.

When conditions warrant, the Engineer may adjust the specified depth. When it is impossible to set a right-of-way survey monument at the exact point because of an obstruction, set the right-of-way survey monument along the right-of-way line, or the extended right-of-way line, on both sides of the obstruction. Use 1 foot increments for the offset distance from the exact point to the set monument. Field stamp the aluminum cap "O/S" either below or to the right of the "R/W" stamping.

Provide the Engineer with a complete list of the locations of all right-of-way survey monuments set.

e. Concrete Footings. When required, construct footings of commercial grade concrete according to the Contract Documents.

Extend the top of the footing slightly above the ground line and steel trowel to a smooth finish with a slope to drain away from the post.

f. Monument Box. When required, install the monument box and survey marker by a Licensed Professional Land Surveyor as shown in the Contract Documents.

If the monument box is installed in concrete pavement, use the same mix as used in the pavement.

g. As-Built Construction Plans and Survey Notebooks. Upon completion of the project, provide the Engineer with a set of as-built construction plans with the following information:

- The monument descriptions and the 6 reference ties for all restored PLSS corners.
- The monument descriptions and the 4 reference ties for all field survey monuments on the project centerline or baseline.
- The project stationing and offset of the final position of every right-of-way survey monument and project alignment reference point that was set.
- The permanent replacement benchmarks and remaining construction benchmarks with benchmark number, project station and offset, elevation and description.

Deliver the original field survey notebooks to the Engineer upon completion of the project.

802.4 MEASUREMENT AND PAYMENT

The Engineer will measure each right-of-way survey monument, benchmark monument (concrete cylinder) and monument box as a unit. Contractor construction staking will be measured by the lump sum.

The Engineer will make partial payments according to **TABLE 802-1**. The Engineer may adjust the **TABLE 802-1**, based on Contractor's progress and project complexity.

TABLE 802-1: CONSTRUCTION STAKING PAYMENT SCHEDULE

Percent of Original Contract Amount Completed	Percent of Bid Item Paid
Work Started	25%
5%	40%
25%	60%
50%	80%
70%	95%
All field books and records have been submitted to the Engineer.	100%

The Percent of Original Contract Amount Completed = the amount earned by the Contractor divided by the total dollar value of the original contract (all bid items).

Payment for "Contractor Construction Staking", "Right-of-Way Survey Monument", "Benchmark Monument (Concrete Cylinder)" and "Monument Box" at the contract unit prices is full compensation for the specified work.

SECTION 803

FIELD OFFICE AND LABORATORY

803.1 DESCRIPTION

Provide the designated types of field offices and laboratories shown in the Contract Documents.

BID ITEMS	UNITS
Field Office	Each
Field Office and Laboratory (*)	Each

*Type: A, B or C

803.2 MATERIALS

Provide a field office and laboratory that complies with **TABLE 803-1**.

TABLE 803-1: REQUIREMENTS FOR FIELD OFFICE AND LABORATORY

Requirements	Type A	Type B	Type C	Field Office
Minimum floor area (square feet).	230	160	120	160
Minimum inside width (feet).	9	7	7	7
Minimum ceiling height (feet).	7	7	7	7
Minimum number of windows with screens. Sliding or swinging windows (minimum area per window of 4 square feet) on a minimum of 2 sides of the building.	6	4	4	4
Minimum number of locking outside doors with screen doors.	2	1	1	1
Partitioned for a laboratory area and a drying room. 70 square feet minimum floor area for the drying room. Approximate length of workbench for the drying room of 7 feet. The drying room must have a minimum of 1 window and 1 outside door.	yes	no	no	no
Insulated and weather tight.	yes	yes	yes	yes
Electrical supply 110 volt AC. Install devices necessary to provide transient voltage surge suppression at the building main circuit breaker panel.	yes	yes	no	yes
Minimum number of electrical outlets. Space outlets uniformly throughout the building.	6	6	n/a	6
Minimum number of light fixtures. Uniformly space light fixtures to light the interior of the building.	3	2	n/a	2
Water supply. Provide a minimum pressure of 5 psi, or a minimum head of 12 feet, if a gravity tank is used.	yes	yes	yes**	no
Sink and faucet. Minimum sink dimensions: 30 inches long, 24 inches wide and 6 inches deep. The faucet must have a hose connection.	yes	yes	yes**	no
Minimum total length of workbench (feet). Minimum workbench dimensions: 30 inches wide and 36 to 42 inches high.	30	20	10	20
Number of chairs or stools for use at the workbenches.	2	2	2	2
Writing table or desk with chair. Approximate size of writing table or desk: 5 feet by 30 inches and 30 inches high.	yes	yes	yes	yes
Heating system capable of maintaining a minimum temperature of 70°F.	yes	yes	yes	yes

TABLE 803-1 (cont.)				
Requirements	**Type A**	**Type B**	**Type C**	**Field Office**
Air-conditioning system capable of maintaining a temperature below 85°F.	yes	no	no	yes
Provide a private telephone line service protected from surge voltages. If cellular telephone service is used, provide a compatible data connector that will give the telephone service modem capability.	yes	no	no	yes
Exhaust fan.	yes*	yes*	no	no
Ovens for drying samples. Provide gas or electric as necessary for the ovens.	yes	no***	no***	no
Fire extinguisher	yes	yes	yes	yes

*Type A: Provide an exhaust fan in the drying room capable of changing the air in the room every minute.
Type B: the exhaust fan shall be capable of changing the air in the building every 3 minutes.
** Only when required for testing.
***Provide gas for drying samples, when required.

The Engineer will accept the field offices and laboratories based on compliance with the specified requirements and visual inspection for condition. The DME may accept a non-compliant field office and laboratory if it will meet the needs of the project.

803.3 CONSTRUCTION REQUIREMENTS

When ordered by the Engineer, provide the designated field offices and laboratories for the exclusive use of the Engineer. Set up the field offices and laboratories at the locations designated by the Engineer. Secure and support the field offices and laboratories to prevent vibrations. If the Engineer determines it is necessary to relocate the field offices and laboratories during the progress of the project, relocate the field offices and laboratories to the locations designated by the Engineer. Remove the field offices and laboratories when released by the Engineer.

If the Engineer determines that additional field offices and laboratories (of the types designated in the Contract Documents) are required, provide the types and number of field offices and laboratories requested.

On projects tied by KDOT where the bid items for field offices and laboratories are shown only on one project, provide the field offices and laboratories for use on all of the projects tied by KDOT.

803.4 MEASUREMENT AND PAYMENT

If the Engineer informs the Contractor at the pre-construction conference that the field office or field office and laboratory are not required, the Engineer will underrun this item.

The Engineer will measure each field office and field office and laboratory.

The Engineer will measure each unit on each project (including each designated on KDOT tied projects) only once, even if the unit is relocated, or if the unit is used on all projects tied by KDOT.

A Field Office and Laboratory (Type A) may be substituted for and measured for payment as a Field Office and Laboratory (Type B), a Field Office and Laboratory (Type C) or a Field Office. A Field Office and Laboratory (Type B) may be substituted for and measured for payment as a Field Office and Laboratory (Type C).

Payment for "Field Office and Laboratory" and "Field Office" at the contract unit prices is full compensation for the specified work. The contract unit prices for the various types of field offices and laboratories will govern, regardless of the number of units used on the project.

The Engineer will make partial payments according to **TABLE 803-2**.

TABLE 803-2: FIELD OFFICE AND LABORATORY PARTIAL PAYMENTS	
Condition	**Pay % of Contract Unit Price**
1st estimate after the unit is provided & accepted	40
3 months after accepted	70
When released by Engineer	100

803 - FIELD OFFICE AND LABORATORY

If the Engineer determines that telephone service is unnecessary for "Field Office and Laboratory (Type A)" and "Field Office", the Engineer will reduce the contract unit price for these items by 10%.

If the Engineer requests that the field office and laboratory be relocated, the Engineer will pay a relocation fee of $300 per relocation for "Field Office and Laboratory (Type A)" and "Field Office and Laboratory (Type B)" bid items, and $150 per relocation for "Field Office and Laboratory (Type C)" and "Field Office". The relocation fees will be paid for at the amounts shown, as Extra Work, **subsection 104.6**.

SECTION 804

MAINTENANCE AND RESTORATION OF HAUL ROADS

804.1 DESCRIPTION

Maintain and restore public roads used as haul roads for construction materials.

For the purpose of this specification, a haul road is any public road in Kansas, excluding State highways, over which 5,000 tons or more material is hauled for the construction of the project. Such material includes both commercial delivery and Contractor production. Roads normally used for hauling commercial material into or from established plant sites and quarries are not designated as part of the haul road.

BID ITEM	UNIT
Maintenance and Restoration of Haul Roads (Set)	Lump Sum

804.2 MATERIALS

Provide the type of materials necessary to maintain and restore the haul road to its condition before the hauling begins. The Engineer will accept the materials used based on visual inspection at the point of usage.

804.3 CONSTRUCTION REQUIREMENTS

Provide the Engineer with a written description of the designated haul roads. The description shall include, materials being delivered, materials hauled to the project site and return routes from the project site. The Engineer will notify the owners of the roads (city and county) of the Contractor's designations.

Allow the Engineer sufficient time to inspect the designated haul roads before they are used. The Engineer, the Contractor and the owner of the roads (at their discretion) will jointly inspect the designated haul roads before they are used. The Engineer will document any deficiencies or special conditions regarding the existing roads and structures.

During the hauling operations, use only designated haul roads. Observe legal weight limits and speed limits.

Provide an adequate water supply and apply the water as needed to control dust. Control dust on active haul roads including return routes, in pits and staging areas, and on the project.

Perform preventative and repair maintenance as necessary to minimize the damage to the haul roads.

After the hauling operations are concluded, the Engineer, the Contractor and the owner of the roads (at their discretion) will jointly inspect the designated haul roads. The Engineer will review the results of the initial and final inspections, and will consider the impact of other parties that used the haul roads. Upon consideration of all these factors, the Engineer will determine the extent of restoration necessary to return the haul roads to their conditions at the time of the initial inspections.

Restore the haul roads as directed by the Engineer.

804.4 MEASUREMENT AND PAYMENT

If the Contractor uses the designated haul roads, the Engineer will measure maintenance and restoration as a lump sum. This measurement for payment is made regardless of whether or not it is necessary for the Contractor to perform any maintenance or restoration.

If the Contractor does not use any designated haul roads, no measurement for payment is made.

If the Contractor uses haul roads (as defined in this specification) other than those designated, payment for "Maintenance and Restoration of Haul Roads (Set)" is forfeited. The Engineer will require that the Contractor restore the undesignated haul roads to their approximate condition before hauling to the project began. The Engineer will determine the extent of restoration necessary.

Payment for "Maintenance and Restoration of Haul Roads (Set)" at the contract unit price is full compensation for the specified work.

SECTION 805

WORK ZONE TRAFFIC CONTROL AND SAFETY

805.1 DESCRIPTION

Provide, erect, maintain and remove traffic control devices as shown in the Contract Documents.

On roadways that carry traffic through construction, address elevation drops at edge of driving lanes as provided in **subsection 805.3n**.

BID ITEMS	UNITS
Work Zone Signs (0 to 9.25 Sq. Ft.)	Each Per Day
Work Zone Signs (9.26 to 16.25 Sq. Ft.)	Each Per Day
Work Zone Signs (16.26 Sq. Ft. and over)	Each Per Day
Work Zone Sign (Special) (**)	Each
Work Zone Barricades (Type III – 4 to 12 Lin. Ft.)	Each Per Day
Arrow Display	Each Per Day
Portable Changeable Message Sign	Each Per Day
Channelizer (Fixed)	Each Per Day
Channelizer (Portable)	Each Per Day
Work Zone Warning Light (Type "A" Low Intensity)	Each Per Day
Work Zone Warning Light (Red Type "B" High Intensity)	Each Per Day
Pavement Marking (Temporary)	
4" Broken (8.2 ft.) (* Tape)	Sta./Line
4" Solid (* Tape)	Sta./Line
4" Broken (3.3 ft.) (* Tape)	Sta./Line
4" Broken (3.3 ft.) (Flexible Raised Pavement Marker)	Sta./Line
4" Dotted Extension (* Tape)	Sta./Line
Broken (Line Masking Tape)	Sta./Line
Solid (Line Masking Tape)	Sta./Line
Flagger (Set Price)	Hour
Traffic Signal Installation (Temporary)	Lump Sum
Temporary Raised Pavement Marker (*)	Each
Traffic Control	Lump Sum
Traffic Control (Initial Set Up)	Lump Sum

*Type
**Size

805.2 MATERIALS

Provide materials as shown in the Contract Documents that comply with the following requirements.

Reflective Sheeting ..... **DIVISION 2200**
Work Zone Warning Lights ..... **DIVISION 1700**
Nonmetallic Drums & Conical Delineators ..... **DIVISION 1700**
Temporary Pavement Marking ..... **DIVISION 2200**

a. General. The size, shape, color and placement of all traffic control devices and appurtenances shall comply with the details shown in the Contract Documents and the most recent edition of the Manual on Uniform Traffic Control Devices (MUTCD) adopted by the Secretary. The size and layout of the sign message shall comply with the latest edition of "Standard Highway Signs and Standard Alphabets for Highway Signs".

b. Warning Flashing or Sequencing Arrow Panels. When specified, provide, install and maintain a flashing or sequencing arrow panel capable of being legible for a minimum distance of ½ mile. Provide flashing or sequencing arrow panels that comply with Part VI of the MUTCD. Flashing or sequencing arrow panels shall have a control for lamp intensity, using an automatic solar cell switch, backed by a manual switch and capable of dimming

50% from the rated lamp voltage for nighttime operation. The panel shall provide a flashing rate of lamps between 25 and 40 flashes per minute. The minimum lamp "on time" shall be 50% for the flashing arrow and 25% for the sequential chevron. Arrow panel lamps or lenses shall be recessed, or alternately equip with a minimum 180º upper hood. The color of light emitted shall be yellow.

c. Portable Changeable Message Sign (PCMS). When specified, provide, install and maintain the PCMS. Operate continuously, when necessary. Provide a PCMS that complies with Part VI of the MUTCD, with the following additions and exceptions in regard to the components:

- A message sign panel with the approximate size of each character of 18 inches high and 12 inches wide.
- A message sign panel with yellow or orange characters displayed on a black background.

d. Pavement Marking (Temporary) - Flexible Raised Pavement Marker. Construct the marker body from approximately 0.060 inch thick polyurethane formed in an "L" shape. Other flexible raised pavement markers may be used with approval of the Engineer. Use markers with a base approximately 4 inches wide by 1 ⅛ inch long. Attach to the base, a solid ⅛ inch thick butyl rubber adhesive pad protected with a release paper. Use markers with the vertical portion approximately 4 inches wide by 1 ¼ inches high. Attach a cube-corner microprism reflective tape material horizontally along both sides of the vertical section of the marker. Attach a clear flexible polyvinyl chloride plastic cover to the vertical section of the marker with a heavy duty staple to cover the reflective material during surfacing operations. The markers shall be readily visible at night, from a minimum distance of 300 feet, when viewed with high beam automobile headlamps. Prior to use, the Engineer must accept the markers after satisfactory visual inspection.

e. Temporary Raised Pavement Markers. Install temporary raised pavement markers using adhesive that will not stain the pavement and that allows the markers to be easily removed without damage to the roadway surface.

(1) Type I Markers. Use Type I markers constructed of traffic bearing high impact plastic. The marker may vary in size to a maximum of approximately 4 inches by 4 inches by ¾ inch. Either a square or round base is acceptable. Use markers completely reflectorized with either an acrylic cube-corner retroreflector, or cube-corner microprism retroreflective sheeting material, the same color as the temporary pavement marking line it is to supplement. The markers shall be readily visible at night, from a minimum distance of 300 feet, when viewed with high beam automobile headlamps. Prior to use, markers must be approved by the Engineer.

(2) Type II Markers. Use Type II markers constructed of traffic bearing high impact plastic, approximately 12 inches by 4 inches by 2 ½ inches. Use markers reflectorized either with two yellow acrylic cube-corner retroreflectors or cube-corner microprism retroreflective sheeting material, per face. The markers shall be readily visible at night, from a minimum distance of 300 feet, when viewed with high beam automobile headlamps. Prior to use, markers must be approved by the Engineer.

f. Material for Wedges. Provide material suitable for the purpose intended, such as asphalt millings or earthen material. The Engineer will accept the material for wedges after satisfactory visual inspection of the material in place.

805.3 CONSTRUCTION REQUIREMENTS

a. General. The safe and satisfactory movement of traffic through the project is a high priority and is the responsibility of the Contractor.

Use reasonable and appropriate devices and methods to safeguard the persons and property of the traveling public on roads on which construction work is in progress. Failure of the Engineer to notify the Contractor to maintain such devices or use such methods does not relieve the Contractor of responsibility.

Obtain the Engineer's approval before erecting traffic control devices, changing traffic control devices, or removing traffic control devices, except if an emergency situation requires immediate action.

Erect signs and traffic control devices as shown in the Contract Documents or Traffic Control Plan, unless directed otherwise by the Engineer. At all times during the progress or temporary suspension of the work, provide, erect, remove, relocate, clean, replace and maintain suitable signs, barricades, fences or other necessary traffic control devices and pavement marking shown in the Contract Documents.

If traffic control issues come to the attention of the Engineer, the Engineer will notify the Contractor of any required repairs or replacements which shall be addressed within 24 hours. When the Engineer determines an immediate repair or replacement is required and the Contractor is unable to make the repair or replacement, it will

be performed by KDOT, and the associated cost deducted from the contract. This in no way relieves the Contractor of responsibility to inspect and maintain traffic control.

Perform all work during daylight hours, unless otherwise approved.

When directed by the Engineer, move any traffic control device from one location to another and re-erect it. The Engineer may require additional traffic control devices or flaggers at any time, or at any place.

Construct supports used for mounting signs or devices for temporary conditions to comply with NCHRP 350.

When the Contract Documents provide that traffic be carried through construction, routing of traffic on a detour is prohibited without written approval from the Engineer.

The Engineer will establish work zone speed limits. Confine restricted speed zones to the immediate vicinity of the work, and maintain speed zones over the minimum length of the project. When the vicinity of the work changes, move the restricted work zone devices to the new area.

In order to minimize inconvenience for the traveling public and to increase the effectiveness of signs and traffic control devices, move the devices ahead as the work allows. When no work is in progress, remove from the road or completely cover with an opaque, weatherproof material, all devices which are required only when work is actually being performed.

The Contractor may develop an alternate Traffic Control Plan. Such plan requires the approval from the KDOT District Office or the KDOT Bureau of Traffic Engineering before installation. Such approval may take up to 10 business days.

On roads closed to through traffic, provide access (including the use of temporary surfacing, **SECTION 840**) for residents living along the road to enter or exit their property.

Where practical, park and store all vehicles, equipment, tools and materials off the right-of-way or a minimum of 30 feet from the traveled way unless protected by positive separation barrier.

Do not use the legend "Travel at Your Own Risk" on any sign.

Designate an employee at the project level, available 24 hours a day to repair, replace, remove, relocate, clean and maintain any traffic control device required as directed by the Engineer. Advise the Engineer of the name, local address and local telephone number of the person given this responsibility.

Inspect traffic control devices a minimum of daily during the day, and when needed, at night. With the Engineer, determine the frequency of inspections based upon the need of each project.

Immediately upon discovering or receiving notification of unacceptable traffic control devices, either repair or remove and replace the unacceptable traffic control devices. Record unacceptable traffic control devices and when the condition has been corrected.

b. Work Zone Signs (Special). Work Zone Signs (Special) are signs whose legends are specific to the project for which they are fabricated. These signs will be designated in the Contract Documents.

c. Channelizing Devices. Install the individual types of devices used for the channelization of traffic through the work area, as shown in the Contract Documents.

When the Contract Documents specify channelizer (fixed), only fixed channelizers may be used. When the plans specify channelizer (portable), the Contractor has the option to use either fixed or portable devices, as approved by the Engineer.

(1) Channelizer (Fixed). Fixed devices are devices that are physically adhered to the road surface with a glue or mounting hardware, or are embedded into the ground. See the Contract Documents for the size of tubular markers, required color and pavement marking.

(2) Channelizer (Portable). Portable devices are devices that are self-standing and are held in place with deformable ballast material that is either integral with the device or is applied on or around the base of the device.

(a) Non-metallic Drums & Conical Delineators. Use fully reflectorized non-metallic drums and conical delineators for channelizing traffic and lane closures. See the Contract Documents for the size of drum and conical delineator and required pavement marking.

(b) Traffic Cones. Only use traffic cones during temporary daytime activities where there is adequate surveillance to see that they remain in place. Keep the cones clean and bright for maximum target value. See the Contract Documents for the size of cones, required color and pavement marking.

d. Warning Flashing or Sequencing Arrow Panels. Where specified, provide, install and maintain an advance warning flashing or sequencing arrow panel. Mount on a portable chassis and operate continuously when

required to divert traffic. Adjust the lamp intensity for the advance warning flashing or sequential arrow panel to prevent a blinding effect and to compensate for daytime and nighttime light conditions.

e. Portable Changeable Message Sign (PCMS). Where specified, provide, install and maintain a PCMS and operate continuously, as required.

f. Warning Lights. Use the required type warning lights as shown in the Contract Documents. Provide Type A warning lights on traffic control devices lighted from sunset to sunrise. Provide Red Type B (high intensity) lights lighted 24 hours per day.

g. One-way traffic/Flaggers. Provide two-way traffic on a normal roadway whenever practicable, avoiding one-way traffic where reasonable.

When one-way traffic is required, provide courteous, competent flaggers, able to communicate effectively with the traveling public, to direct traffic in a one-way traffic operation. Use flaggers that know and observe all regulations prescribed for flaggers. The latest edition of the KDOT Flagger Handbook will apply. Copies may be obtained from the Engineer. Equip flaggers with hand signaling signs mounted on suitable staffs, (minimum 60 inches as measure from the bottom of the sign) and wearing reflectorized, orange headgear and an ANSI Type II orange vest while on duty. For night time flagging conditions, ANSI Type II reflectorized pants are also required for flaggers.

The Contractor may use uniformed enforcement officers as flaggers in lieu of the above uniformed flaggers. When used as a flagger by the Contractor, law enforcement officers shall wear their official uniform with badge.

When one-way traffic is approved, temporary traffic signals may be used in lieu of flaggers to control traffic, when approved by the Engineer. Continued use will be based upon satisfactory performance of the system to effectively move traffic through the area.

Flaggers may not be required if satisfactory automated flagger assistance devices, approved by the Engineer, are provided.

h. Pilot Cars. Use a pilot car to assist and lead traffic during one way operations which are over a distance greater than can be seen between flaggers, and when no traffic should be on the work. Maintain pilot car operations continuously, causing no delay to traffic for reasons such as refueling and breaks. The maximum time for pilot car round trip is 15 minutes. Coordinate the work accordingly. Do not use the pilot car for other purposes.

Pilot cars shall be approved vehicles, preferably carrying the Contractor's company insignia, and equipped with signs reading "Pilot Car-Follow Me" mounted a minimum of 1 foot above the top of the vehicle and clearly visible from both directions.

i. Traffic Signal Installation (Temporary). When designated, install traffic signal installation (temporary) as shown in the Contract Documents.

j. Temporary Pavement Marking. When traffic is carried through construction, provide and maintain temporary pavement marking as shown in the Contract Documents. If temporary pavement markings are to be placed on a surface which has existing lines or markings, remove the incorrect lines or markings according to **SECTION 808**. Use temporary pavement marking types as indicated in **TABLE 805-1**.

TABLE 805-1: TEMPORARY PAVEMENT MARKING

Type	Use
Type I	Final surface (new pavement or any surface that will remain when the project is complete).
Type II*	Any surface that is to be removed or covered by future construction.
Type IIA*	Temporary broken lines on intermediate asphalt surfaces, only.

*When Type II or Type IIA is specified, the Contractor has the option to use either Type I or Type II tape.

Apply the pavement marking tape according to the manufacturer's recommendations. If solid lane markings are required, cut them at approximately 100 foot intervals after they are applied to the pavement. Make the cut through the entire width and thickness of the tape.

When shown in the Contract Documents, apply line masking tape to the surface to temporarily cover the existing pavement markings in widths or sizes sufficient to extend approximately 1 inch beyond the edges of the existing pavement markings.

When warranted by weather conditions (or other conditions that prevent the tape from adhering to the pavement), the Engineer may authorize the use of paint or other materials for temporary pavement marking.

When painting is approved, comply with **SECTION 807**.

The following are general guidelines for temporary pavement marking configurations:

- Solid stripes and broken (8.2 ft.) stripes are intended for use on interstates and on long term (greater than 45 days) traffic configurations different than the original or final pavement markings.
- Broken (3.3 ft.) stripes are intended for use on intermediate lifts of asphalt surfacing projects where movement of traffic through the project is required, and on final surfaces that are opened to traffic prior to placing the permanent pavement markings.
- Broken (3.3 ft.) stripes placed on the final surface should be replaced with permanent pavement markings within 2 weeks.
- Use the severe curve pattern on curves with less than a 1000 foot radius.
- Dotted extension lines may be used to provide extra guidance through intersections or interchanges.

Use **TABLE 805-2** to determine broken stripe dimensions.

TABLE 805-2: BROKEN STRIPE DIMENSIONS

Type	Approximate Length (ft.)	Gap (ft.)	Repeating Cycle (ft.)
Broken (8.2 ft.)	8.2	24.6	32.8
Broken (3.3 ft.)	3.3	29.5	32.8
Severe curvature	1.6	14.8	16.4
Dotted Extension Lines	2.0	3.9	5.9

Place temporary pavement marking as close as practical to the intended alignment and parallel to the intended line. On HMA surfacing projects when traffic is being carried through the project, place temporary marking after each lift of HMA has been placed and before traffic is allowed on the new lift. Place temporary marking on intermediate HMA lifts within approximately 12 inches of the intended alignment. Place temporary markings on the final surface within approximately 6 inches of the intended alignment.

k. Flexible Raised Pavement Markers. When shown in the Contract Documents, use flexible raised pavement markers. When used on asphalt seals, place the flexible raised pavement markers on the roadway prior to the sealing operations, removing the clear plastic cover after sealing operations. When used on all other surface treatments, place the flexible raised pavement markers on the new surface treatment. In all cases, install markers in a group of 3 according to **TABLE 805-3**.

TABLE 805-3: FLEXIBLE RAISED PAVEMENT MARKERS

Condition	Approximate Length (ft.)	Gap (ft.)	Repeating Cycle (ft.)
Normal	1.6	29.5	32.8
Severe curvature*	0.8	14.8	16.4

* Use the severe curve pattern on curves with less than a 1000 foot radius.

l. Temporary Raised Pavement Markers. Install temporary raised pavement markers at locations shown in the Contract Documents. Follow the manufacturer's recommendations for installation and removal.

m. Uneven Lanes. When the height differential between adjacent lanes is greater than 1 inch, use the W8-11 Uneven Lanes sign as part of the Traffic Control Plan.

n. Shoulder Drop-Off Treatment. Adhere to **TABLE 805-4**.

TABLE 805-4: SHOULDER DROPOFF	
Condition	**Action**
The drop-off between driving lane and shoulder is 2 inches or less Or The drop-off between the edge of roadway and adjacent material is 2 inches or less	No action required.
The drop-off between driving lane and shoulder is between 2 to 4 inches Or The drop-off between the edge of roadway and adjacent material is between 2 to 4 inches.	Use Shoulder Drop-off Signs (W8-9A and W7-3A) as part of the Traffic Control Plan. Place the W8-9A and W7-3A signs at the beginning of the project and at each intersecting State highway. Remove or cover the signs when not applicable.
The drop-off between driving lane and shoulder is greater than 4 inches Or The drop-off between the edge of roadway and adjacent material is greater than 4 inches.	Construct a 1:3 or flatter slope wedge (either temporary or permanent, as required) against the pavement edge, using asphalt millings, earthen material or other materials approved by the Engineer. For unusual and justifiable conditions the Engineer may approve the use of channelizing devices instead of a wedge at the pavement edge. On high speed roadways (roadways with posted speed limits greater than 45 MPH), space the channelizing devices so that the distance (in feet) between devices is approximately 2 times the posted speed limit. On low speed roadways and urban streets (roadways with posted speed limits less than or equal to 45 MPH), space the channelizing devices so that the distance (in feet) between devices is approximately equal to the speed limit. Do not leave shoulder drop-offs greater than 4 inches unprotected overnight without a wedge or channelizing device. To the extent reasonable, provide an obstruction free recovery area.

o. Weather and Increased Traffic Volume Conditions. During periods of inclement weather, or during periods of unusually heavy traffic, from any cause, the Engineer may require construction operations to cease in order to adequately handle the traffic. The Engineer reserves the right to require the suspension or delay of certain operations, or the speeding up of specific operations to obtain a sequence of operations that will aid the movement of traffic.

805.4 MEASUREMENT AND PAYMENT

a. General. No adjustments in the contract unit price will be made regardless of the amount or underruns or overruns.

b. Traffic Control (Lump Sum). When traffic control is shown in the Contract Documents as a lump sum it will be measured as such. The Engineer will not measure the W8-11 Uneven Lanes signs or W8-9A and W7-3A Shoulder Drop-Off signs for separate payment.

The Engineer will make payments as shown in **TABLE 805-5**.

TABLE 805-5: TRAFFIC CONTROL (LUMP SUM) PARTIAL PAYMENTS		
Percent of Original Contract Amount Completed	**Pay Lesser of the Two**	
	% of Traffic Control	**% of Original Contract Amount**
10	50	5
80	100	10
100	100	NA

The Percent of Original Contract Amount Completed = the amount earned by the Contractor* divided by the total dollar value of the original contract (all bid items).

*Do not include monies earned for "Mobilization", "Traffic Control (Lump Sum)", "Contractor Construction Staking" and "Stored Materials".

c. Individual Devices and Pavement Marking.

(1) General. When bid items are shown in the Contract Documents for individual traffic control devices, the Engineer will measure each item by the designated unit, when the device is required, in place, and in an acceptable condition and position.

Measurement for payment of traffic control devices will begin on the day they are installed for traffic control and direction. When traffic control devices are not needed, they shall be removed or covered and will not be measured.

During non-working periods such as Sundays and holidays, the list of devices in place and in satisfactory condition will be measured for payment on the day following, to determine the measurement for pay.

During suspended periods, measurement of the devices used will be based on periodic checks conducted by the Engineer. These periodic checks do not relieve the Contractor of responsibility for traffic control.

Units used for only a portion of a day will be paid for as one full day's use, regardless of the length of time they are used during that day and number of times the unit is moved and re-erected.

Payment will not be made for any traffic control devices that remain in an unacceptable condition for 1 full day after the Contractor has been notified.

Delineators, traffic cones, pilot cars, temporary traffic signals used in lieu of flaggers, or uniformed flaggers specified by the Traffic Control Plan, shown in the Contract Documents or approved alternate Traffic Control Plan are subsidiary to other bid items.

(2) Work Zone Signs (Size). The Engineer will measure each Work Zone Sign (Size) per each calendar day the device is required, in place and in an acceptable condition and position.

(3) Work Zone Sign (Special) (Size). The Engineer will measure each Work Zone Sign (Special), when the sign is first installed in place for traffic control and direction. No additional measurement will be made for relocating, repairing or maintaining the special signs. On the first estimate following the initial installation of a Work Zone Sign (Special) (Size) the price bid per sign will be paid for each sign installed.

(4) Barricades. The Engineer will measure each Work Zone Barricade (Type III – 4 to 12 Lin. Ft.) per each calendar day the device is required, in place and in an acceptable condition and position. Quantities shown in the Contract Documents are for estimating purposes only. Quantities for Type III barricades are estimated using 8 foot barricades.

(5) Arrow Display and Portable Changeable Message Sign. The Engineer will measure each Arrow Display and Portable Changeable Message Sign per each calendar day the device is required, in place and in an acceptable condition and position.

(6) Channelizer (Fixed or Portable). The Engineer will measure each Channelizer (Fixed or Portable) per each calendar day the device is required, in place and in an acceptable condition and position.

(7) Work Zone Warning Lights (Type "A" or Red Type "B"). The Engineer will measure each Work Zone Warning Light (Type "A" or Red Type "B") per each calendar day the device is required, in place and in an acceptable condition and position.

(8) Pavement Marking (Temporary).

(a) The Engineer will measure Pavement Marking (Temporary) used on HMA or other asphalt type surfaces per line of pavement marking per lift, per Station line. When double yellow centerline marking is required, the Engineer will measure both lines for payment. The Pavement Marking (Temporary) used for widening and decelerating lanes, accelerating lanes and ramp areas will not be paid for directly, but will be considered subsidiary. When required, word and/or symbols will be subsidiary to other bid items.

(b) The Engineer will measure Pavement Marking (Temporary), on other types of surfacing construction per station per line. When required, word and/or symbols will be subsidiary to other bid items.

(c) If the Contractor elects to use Type I temporary pavement marking tape in place of Type II tape, the Type I tape will be measure and paid for as Type II temporary pavement marking tape.

Required removal of temporary tape is subsidiary to other items in the contract.

When the Engineer authorizes a change to paint, the unit price for paint will be a percentage of the unit price for tape:

- If replacing Type I tape with paint, the unit price for paint is 40% of the contract unit price for Type I tape.
- If replacing Type II tape with paint, the unit price for paint is 30% of the contract unit price for Type II tape.
- Repainting when required will not be measured.

Regardless of the type of tape replaced with paint, removal of the paint is subsidiary to the unit price for the paint.

(9) Flaggers (Set Price). When flaggers are specified in the Contract Documents or approved Traffic Control Plan, they will not be paid for separately, but will be considered as subsidiary to the other bid items. If the Contractor is allowed to use temporary traffic signals in lieu of flaggers, temporary traffic signals will not be paid for separately, but will be considered subsidiary to the other items of the contract.

If the Engineer determines that additional flaggers are required, each additional flagger will be measured for each hour they are required.

(10) Traffic Signal Installation (Temporary). The Engineer will measure temporary traffic signals by the lump sum, when shown as a bid item in the Contract Documents and part of the Traffic Control Plan. The Engineer will make payments as follows:

- Pay 75% of the contract unit price after the traffic signals are initially installed and are operational.
- Pay 100% after the traffic signals are no longer needed for the movement of traffic and have been removed and/or stockpiled, as specified.

The Engineer will not measure temporary traffic signal installations when the Contractor elected to use Traffic Signals rather than flaggers.

(11) Temporary Raised Pavement Markers. The Engineer will measure each temporary raised pavement marker. No additional measurement will be made for cleaning or replacement of markers.

(12) Traffic Control (Initial Set Up). If the amount bid for this item is less than 25% of the sum of the amounts bid for all traffic control items, 100% of the amount bid for this item will be paid on the first estimate following the beginning of any traffic control set up done on the project.

If the amount bid for this item is 25% or greater than the sum of the amounts bid for all traffic control items, the amount equal to 25% of the sum of the amounts bid for all traffic control item will be paid on the first estimate following any traffic control set up done on the project. Upon completion of all work on the project, 100% of the amount bid for this item will be paid.

(13) Uneven Lane Signs. When individual Traffic Control bid items are shown in the Contract Documents, the Engineer will measure the Uneven Lanes (W8-11) signs each per day. See **subsection 805.4b.** when traffic control is bid Lump Sum.

(14) Wedges. The Engineer will not measure for payment the wedges at the pavement edge or the channelizing devices used in lieu of a wedge.

If the contract has individual traffic control bid items, the Engineer will measure the shoulder drop-off signs (W8-9A and W7-3A) each per day. See **subsection 805.4b.** when traffic control is bid Lump Sum.

(15) Liquidated Damages. Once the Contractor is being assessed liquidated damages according to **subsection 108.8**, no traffic control devices will be measured for payment. On Calendar Completion Date projects with interim completion dates, no traffic control devices will be measured other than those required between the interim completion date and the next beginning work period. This does not relieve the Contractor from the responsibility for providing all necessary traffic control on the project until it has been completed and accepted. Such traffic control will be at the Contractor's expense.

d. Payment. Payment for all individual traffic control devices, "Pavement Markings (Temporary)", "Flaggers", "Traffic Signal Installation (Temporary)", "Temporary Raised Pavement Marker (*)", "Traffic Control" and "Traffic Control (Initial Set Up)" at the contract unit prices is full compensation for the specified work.

DIVISION 806

DURABLE PAVEMENT MARKING

806.1 DESCRIPTION

Prepare the pavement and apply the pavement markings as shown in the Contract Documents.

BID ITEMS	UNITS
Pavement Marking (*) (**) (***)	Linear Foot
Pavement Marking (Plowable Raised Pavement Marker) (**)	Each
Pavement Marking Symbol (*) (White) (****)	Each

*Type of Pavement Marking: Cold Plastic, Patterned Cold Plastic, Epoxy, Thermoplastic, Thermoplastic-Spray, Intersection Grade or Multi-Component
** Color
*** Width
**** Type of Symbol

806.2 MATERIALS

Provide durable pavement marking materials that comply with **DIVISION 2200**.

806.3 CONSTRUCTION REQUIREMENTS

a. General.

(1) Equipment. Use equipment designed for the preparation and application of the appropriate type of pavement marking material.

(2) Contractor's Personnel. Provide a minimum of 1 employee on the project holding an American Traffic Safety Services Association (ATSSA) pavement marking certification and experienced in the application of the appropriate type of pavement marking material.

(3) Pavement Marking Contractors. Provide a letter of certification from the pavement marking manufacturer indicating the Contractor's qualifications to install their product.

(4) Surface Preparation. On existing pavements, remove the existing pavement markings according to **SECTION 808** and according to the recommendations of the manufacturer of the new pavement markings.

Remove temporary pavement markings, if any, the same day the durable pavement markings are applied.

Remove loose particles, dirt, tar, grease, residue of prior pavement markings and other deleterious material from the pavement surfaces.

(5) Alignment. Lay out the pavement marking as detailed in the Contract Documents. If the Contract Documents do not provide details, submit to the Engineer for approval, a layout plan for the pavement markings that complies to the MUTCD. Locate longitudinal pavement marking stripes a minimum of 2 inches and a maximum of 8 inches from longitudinal joints. Provide adequate guide marks (approximately 2 inches by 12 inches at approximately 30 to 50 foot intervals) for the application of the pavement markings.

(6) Pavement Marking Application. Provide the Engineer with a copy of the manufacturer's application instructions. Apply the pavement markings according to the manufacturer's recommendations.

Follow the manufacturer's recommendations regarding pavement and ambient temperature at the time of application. The Engineer will verify the pavement and ambient temperatures before beginning work and when deemed necessary.

Apply pavement markings straight and close to the intended alignment without abrupt changes that result in an unacceptable appearance.

(7) Replacement of Unsatisfactory Pavement Marking. Lines that deviate laterally from the intended alignment more than 2 inches in 200 feet may be rejected.

Remove and replace pavement markings that:

- have drag marks, gashes, gouges, foreign covering, discolored areas or areas that have failed to solidify.
- have improper adhesion, width, length or thickness.

- have areas that present a ragged appearance, areas that do not present sharply defined edges, or areas with abrupt unintended changes in alignment.

Remove and replace all unsatisfactory pavement markings that do not comply with **TABLE 806-1**.

TABLE 806-1: MINIMUM RETROREFLECTIVITY REQUIREMENTS

TYPE OF MATERIAL	COLOR	millicandelas/sq m/lux* (minimum) (Initial)
Cold Plastic	White	250
	Yellow	175
Patterned Cold Plastic	White	475
	Yellow	375
Epoxy	White	325
	Yellow	250
High Durability Tape	White	225
	Yellow	175
Thermoplastic	White	300
	Yellow	225
Preformed Thermoplastic	White	300
	Yellow	225
Spray Thermoplastic	White	300
	Yellow	225
Multi Component	White	325
	Yellow	250

NOTE: Provide an acceptable 100 foot retroreflectometer to use on the project which will remain the property of the Contractor. In the presence of the Engineer, measure the retroreflectivity between 12 hours and 14 days after the application. Take a minimum of 10 readings per color line evenly spaced on a 2,000 foot roadway section every 1 mile. The Engineer will average all of the readings for each color line within the 2,000 foot section to determine the retroreflectivity.

(8) Acceptance of Pavement Marking. The Engineer will not examine pavement marking for final acceptance until the pavement markings complete a 180 calendar day observation period. The Contractor is responsible for the pavement marking during this period. The 180 calendar day observation period begins the day following the completion of the pavement marking. Providing all other work on the contract is complete, the Engineer will not assess working day charges during the 180 calendar day observation period.

At the end of the 180 calendar day period, the Engineer will examine the pavement marking and inform the Contractor of all pavement marking required to be replaced. Before the project is accepted, replace all failed pavement markings, at own expense. The pavement marking is failed, when more than 10% of the substrate is exposed in a 2,000 foot section of longitudinal pavement marking line. The transverse lines and symbols will be evaluated separately for the exposure of 10% substrate. Abrasion of pavement marking at private entrances or intersections may be excluded from examination.

If the Contractor fails to complete the required replacement of pavement markings within 14 calendar days of the examination, during which the application of pavement markings is not precluded by adverse weather or road surface conditions, the Engineer, after giving the Contractor written notice, will reinstate the assessment of working day charges or Liquidated Damages. Working day charges or Liquidated Damages will continue until the work is accepted.

If more than 30% of pavement marking is required to be replaced, the replacement pavement markings will not be accepted until the completion of an additional 180 day observation period.

The Engineer will, upon satisfactory inspection of the pavement marking, accept the work and terminate the Contractor's responsibilities.

b. Cold Plastic/Patterned Cold Plastic Pavement Marking. Grind an inset for the pavement marking into the surface of the pavement. Grind the inset 0.04 ± 0.01 inch deep, with the width and length of the inset a maximum of 2 inches greater than the dimensions of the pavement marking.

On new or existing PCCP, cut the marking tape at any joint in the pavement that is crossed by the tape.

When recommended by the manufacturer, use heat, solvent or other types of adhesive primer.

c. Epoxy Liquid Pavement Marking. When pavement markings are applied to PCCP (including concrete bridge decks) less than 1 year old, remove all curing compounds and laitance by shot or sand blasting.

Use a slower curing epoxy material (40 minutes) for pavement markings applied to PCCP. For other surfaces, fast setting (10 minutes) epoxy material may be used with approval of the Engineer.

Apply the epoxy liquid material closely behind the surface cleaning procedures.

Before mixing the components of the pavement marking material, heat the individual components to the temperature ranges recommended by the manufacturer of the material. Do not exceed the maximum recommended temperature at any time.

Apply the epoxy liquid pavement marking material at a thickness of 20 mil ± 5 mil on asphalt and PCCP. Immediately apply all glass beads (double drop system) to the epoxy liquid pavement marking at the rate of 25 pounds per gallon of epoxy liquid, equally divided between the large and regular bead gradations. Do not mix large and regular gradation beads. Keep and apply large and regular beads separately. Apply the large beads on the first drop and the regular beads on the second.

d. Multi-Component Liquid Pavement Marking. When pavement markings are applied to PCCP (including concrete bridge decks) less than 1 year old, remove all curing compounds and laitance by shot or sand blasting.

Apply the multi-component liquid material closely behind the surface cleaning procedures.

Before mixing the components of the pavement marking material, heat the individual components to the temperature ranges recommended by the manufacturer of the material. Do not exceed the maximum recommended temperature at any time.

Apply the multi-component liquid pavement marking material at the thickness recommended by the manufacturer on asphalt and concrete surfaces. Immediately apply the glass beads (double drop system) to the multi-component liquid pavement marking at the rate recommended by the manufacturer to obtain the required level of retroreflectivity, equally divide between the large and regular bead gradations. Apply the large beads on the first drop and the regular beads on the second.

e. Intersection Grade Pavement Marking.

(1) Multi-Component. Follow **subsection 806.3d**.

(2) High Durability Tape. Grind an inset for the pavement marking into the surface of the pavement. Grind the inset 40 mil ± 10 mil deep with the width and length of the inset a maximum of 2 inches greater than the dimensions of the pavement marking.

On new or existing PCCP, cut the marking tape on either side of any joint in the pavement that is crossed by the tape.

When recommended by the manufacturer, use heat, solvent or other type of adhesive primer.

(3) Preformed Thermoplastic. Use a heating device recommended by the material manufacturer to fuse the preformed thermoplastic to the pavement. Apply the pavement markings as recommended by the manufacturer. When recommended by the manufacturer, use solvent or other type of adhesive primer.

f. All Thermoplastic Pavement Marking. The Engineer will verify the thickness of the thermoplastic pavement marking. Thickness will be checked by placing metal plates or other suitable material of known thickness in a 3 foot section along the path of application at 2 to 3 locations. After the application of the thermoplastic material, the samples will be cut free. The material thickness will be measured using either a micrometer or vernier calipers (with proper correction for the metal plate). The thickness recorded for the locations within the 3 foot section will be averaged. Initially, thickness determinations will be made every ⅓ mile for each color and each stripe width. Once a pattern of compliance is established, the Engineer may reduce the frequency of thickness verification to once each 1 mile section. Failure of a section will require testing to return to the initial frequency until compliance may be re-established. The location of the 3 foot sample segment within the sample section will be selected at random.

The Contractor may provide other devices for gauging thickness to the Engineer for approval.

Apply thermoplastic pavement markings between April 15 and October 15. If the manufacturer's recommendations allow, the Engineer may waive the date restrictions. The Engineer will notify the Contractor in writing of any allowed variance.

(1) Thermoplastic Pavement Marking. The required thickness for longitudinal markings is a minimum of 90 mil at the edges, and a maximum of 125 mil at the center of the stripe. The required thickness for transverse markings and symbols is a minimum of 125 mil at the edges, and a maximum of 160 mil at the center.

If used, apply the binder-sealer according to the manufacturer's recommendations. The Engineer will not approve the application of the thermoplastic material until the binder-sealer applied to the pavement is devoid of all solvent or water. The Engineer may waive the use of binder-sealer on new pavement and existing surfaces with less than 20% exposed aggregate.

Apply prepared thermoplastic material in a molten state within a temperature range of 400 to 440ºF. The Engineer will not approve the use of scorched material or prepared material that has been maintained at 440ºF for a period exceeding 4 hours.

Apply Type 1 glass beads at a minimum rate of 15 pounds per 100 square foot. Embed glass beads in the thermoplastic material so that 40 to 50% of the sphere's cross-sectional diameter remains exposed.

(2) Sprayed Thermoplastic Pavement Marking. Apply the pavement markings as recommended by the manufacturer at a thickness of 40 ± 5 mils.

Apply prepared thermoplastic material in a molten state within a temperature range of 375 to 425ºF. The Engineer will not approve the use of scorched material or prepared material that has been maintained at 425ºF for a period exceeding 4 hours.

g. Plowable Raised Pavement Markers. Do not place plowable raised markers on pavement construction joints, pavement with surface defects or within intersections with public streets or driveways. If the layout operation shows a marker to be placed in an undesirable location, adjust the marker longitudinally to a location approved by the Engineer. If the longitudinal adjustment exceeds the typical spacing by more than 10%, delete the marker.

Place the plowable raised markers with the retroreflective face of the marker perpendicular to the roadway centerline. Machine the pavement to match the bottom contour of the plowable raised marker. Machine the recesses so that the tips of the snowplow deflecting surfaces (on the markers) are below the pavement surface when the markers are installed. Install the markers the same day the recesses are machined in the pavement.

Clean and dry the machined recess before the epoxy adhesive is applied in the recess.

Mix and use the epoxy adhesive according to the manufacturer's recommendations. Place sufficient epoxy adhesive in the machined recess to eliminate all voids beneath and around the plowable raised marker and to create a watertight seal. Hand place the marker into the machined recess.

Protect the plowable raised marker from traffic until the epoxy adhesive has cured. Follow the manufacturer's recommendations regarding the minimum cure time.

806.4 MEASUREMENT AND PAYMENT

The Engineer will measure the various widths and colors or pavement markings by the linear foot.

The Engineer will measure each symbol and plowable raised marker.

The Engineer will pay for 90% of the completed quantity for each of the various widths and colors of pavement marking, symbols, and plowable raised markers. Upon acceptance of the pavement markings following the 180 day observation period, the Engineer will pay for the remaining 10% of the completed quantity for each of the various widths and colors of pavement marking, symbols, and plowable raised markers.

Payment for "Pavement Marking", "Pavement Marking (Plowable Raised Pavement Marker)" and "Pavement Marking Symbol" at the contract unit prices is full compensation for the specified work.

SECTION 807

PAINTED PAVEMENT MARKING

807.1 DESCRIPTION

Apply pavement markings as shown in the Contract Documents.

BID ITEMS	UNITS
Pavement Marking (Paint) (*) (**)	Linear Foot
Pavement Marking Symbol (Paint) (White) (***)	Each

* Color
** Width
*** Type of Symbol

807.2 MATERIALS

Provide paint that complies with **SECTION 2200**.

807.3 CONSTRUCTION REQUIREMENTS

a. Equipment. Use equipment designed for the preparation and application of the appropriate type of pavement marking material.

b. Contractor's Personnel. Provide a minimum of 1 employee on the project holding an American Traffic Safety Services Association (ATSSA) pavement marking certification and experienced in the application of the appropriate type of pavement marking material.

c. Surface Preparation. On existing pavements, remove the existing pavement markings according to **DIVISION 808** and the recommendations of the manufacturer of the new painted pavement markings.

Remove temporary pavement markings, if any, the same day the painted pavement markings are applied.

Remove loose particles, dirt, tar, grease, residue of prior pavement markings and other deleterious material from the pavement surfaces as a result of surface preparation.

d. Alignment. Lay out the pavement marking as detailed in the Contract Documents. If the Contract Documents do not provide details, submit a layout plan for the pavement markings to the Engineer for approval. Locate longitudinal pavement marking stripes a minimum of 2 inches and a maximum of 8 inches from longitudinal joints. Provide adequate guide marks (approximately 2 inches by 1 foot at approximately 50 foot intervals) for the application of the pavement markings.

e. Pavement Marking Application. Provide the Engineer with a copy of the manufacturer's application instructions. Apply paint according to the manufacturer's recommendations.

Apply paint at a wet film thickness of 18 mils at an approximate rate of 3.8 gallons per 1,000 foot for 4 inch solid line, and 0.95 gallons per 1,000 foot for 4 inch broken line. For other widths of marking, increase the amount of paint proportionally.

Apply glass beads to the painted line at a rate of 10 pounds of glass beads for each gallon of paint. Use an automatic bead dispenser attached to the striping machine in such a manner that the beads are dispensed almost instantaneously upon the line as it is being installed. Equip the glass bead dispenser with an automatic cut-off control synchronized with the cut-off of the paint.

Keep traffic from crossing the newly applied lines by coning off the lines until the lines are dry to no-pick-up. The Contractor may reduce or eliminate the need for this by using fast dry paints and approved traffic control.

Do not apply the paint when the air temperature is below 40ºF, upon damp or frosted surfaces, or when, in the opinion of the Engineer, conditions are not satisfactory for the work.

f. Replacement of Unsatisfactory Pavement Marking. Apply pavement markings straight and close to the intended alignment without abrupt changes that result in an unacceptable appearance. Lines that deviate laterally from the intended alignment more than 2 inches in 200 feet may be rejected.

Remove and replace pavement markings that have:

- drag marks,
- gashes,
- gouges,
- foreign covering,
- discolored areas,
- areas that have failed to solidify,
- improper adhesion,
- improper width, length or thickness,
- areas that present a ragged appearance,
- areas that do not present sharply defined edges,
- areas with abrupt unintended changes in alignment.

Removal and replacement of unsatisfactory pavement marking will be at the Contractor's expense.

807.4 MEASUREMENT AND PAYMENT

The Engineer will measure the painted pavement marking by the linear foot for the various widths and classes.

The Engineer will measure each symbol.

Payment for "Pavement Marking (Paint)" and "Pavement Marking Symbol (Paint) (White)" at the contract unit prices will be full compensation for the specified work.

SECTION 808

REMOVAL OF EXISTING PAVEMENT MARKINGS

808.1 DESCRIPTION

Remove the existing pavement markings and symbols as shown in the Contract Documents.

BID ITEMS	UNITS
Pavement Marking Removal	Linear Foot
Pavement Marking Removal (Plowable Raised Marker)	Each

808.2 MATERIALS - None specified.

808.3 CONSTRUCTION REQUIREMENTS

a. Removal of Existing Stripes and Symbols. Remove the existing pavement markings and symbols without damaging the pavement surface. As the work progresses, remove all material deposited on the pavement as a result of the removal operations. When blast cleaning within 10 feet of the traveling public, continuously remove all residue and dust.

When replacement of the removed existing markings is a part of the Contract Documents, follow the manufacturer's requirements for the new pavement markings as to the method of removal of the existing markings, or surface preparation requirements.

b. Removal of Plowable Raised Markers. If the plowable raised markers are to be reinstalled, remove them without damaging. All damaged plowable raised markers will be replaced at the Contractor's expense.

c. Repair. Use methods approved by the Engineer to repair all pavement damaged during the pavement marking removal operations.

808.4 MEASUREMENT AND PAYMENT

The Engineer will measure the removal of each skip and solid line of existing pavement marking by the linear foot.

The Engineer will measure each plowable raised marker removed.

The Engineer will not measure removal of existing pavement marking symbols for payment.

Payment for "Pavement Marking Removal" and "Pavement Marking Removal (Plowable Raised Marker)" at the contract unit prices is full compensation for the specified work.

SECTION 809

CONCRETE SAFETY BARRIER

809.1 DESCRIPTION

Construct permanent cast-in-place concrete safety barrier according to the Contract Documents. Place and remove temporary precast concrete safety barrier according to Contract Documents.

BID ITEMS	UNITS
Concrete Safety Barrier (*)	Linear Foot
Concrete Safety Barrier (*) (Temporary)	Linear Foot
Concrete Safety Barrier (*) (Temporary - Installation Only)	Linear Foot
Concrete Safety Barrier (*) (Temporary - Relocate)	Linear Foot

*Type

809.2 MATERIALS

a. Permanent Cast-in-Place Concrete Safety Barrier. Provide materials that comply with the Contract Documents and **DIVISIONS 1000 - 2500**. The Engineer will visually inspect the completed installation before making final acceptance.

b. Temporary Precast Concrete Safety Barrier. Provide certification (prepared by the Manufacturer or Contractor) that the temporary precast concrete safety barrier complies with the requirements on the Contract Document. Provide either new or used, temporary precast concrete safety barrier. The Engineer will accept, either new or used, temporary precast concrete safety barrier upon acceptance of the provided certification, and visual inspection of the delivered and installed temporary precast concrete safety barrier on the project.

c. Median Filler Material. Provide SB-3 for median filler material that complies with **DIVISION 1100**.

809.3 CONSTRUCTION REQUIREMENTS

a. Permanent Cast-in-Place Concrete Safety Barrier. Construct the cast-in-place concrete safety barrier as shown in the Contract Documents and according to **DIVISION 700**.

Place median filler material as indicated in the Contract Documents.

b. Temporary Precast Concrete Safety Barrier. Install and remove the precast concrete safety barrier as required. Do not use temporary precast concrete safety barrier that is damaged or deteriorated. Erect the temporary precast concrete safety barrier as shown in the Contract Documents. The temporary precast concrete safety barrier will remain the property of the Contractor, unless shown otherwise in the Contract Documents.

If the Contract Documents require installation only, transport from the designated stockpile, install and return the temporary precast concrete safety barrier to the designated location.

Relocate the temporary precast concrete safety barrier as shown in the Contract Documents, or as directed by the Engineer.

Remove and replace all sections of temporary precast concrete safety barrier damaged during or after placement. Remove, clean or replace temporary precast concrete safety barrier (including barrier delineators) that has deteriorated to the point of being non-effective.

809.4 MEASUREMENT AND PAYMENT

a. Permanent Cast-in-Place Concrete Safety Barrier. The Engineer will measure cast-in-place concrete safety barrier by the linear foot along the centerline of the barrier.

Payment for "Concrete Safety Barrier (*)" at the contract unit prices is full compensation for the specified work. Median filler material is subsidiary to other items in the contract.

b. Temporary Precast Concrete Safety Barrier. The Engineer will measure the precast concrete safety barrier by the linear foot (number of sections times the nominal section length). A precast concrete safety barrier transition section (regardless of actual length) will be measured as a nominal section length of temporary precast concrete safety barrier.

The quantity of precast concrete safety barrier measured for payment is the maximum quantity required on the project at any one time, plus any replacement sections measured for payment, and is paid for as Concrete Safety Barrier (*) (Temporary). Each section of temporary precast concrete safety barrier will be measured for payment when put in use on the project.

Sections of temporary precast concrete safety barrier used to replace sections damaged by traffic while in use will be measured for payment and paid as Concrete Safety Barrier (*) (Temporary-Installation Only) when put in use on the project. When provided by the Contractor, sections of temporary precast concrete safety barrier used to replace deteriorated sections or sections damaged through negligence of the Contractor are not measured for payment.

When stage construction requires that the precast concrete safety barrier be moved from its initial position to an alternate position, the Engineer will measure the relocated barrier by the linear foot (number of sections times the nominal section length). The barrier will be measured for payment in each relocated position the barrier is placed and is paid as Concrete Safety Barrier (*) (Temporary-Relocate). If the stage construction requires that the barrier be removed from the project to a storage location, and returned to the project during a subsequent construction stage, each movement of the barrier will be considered a relocation.

Removal of the precast concrete safety barrier, when no longer required on the project, is not measured for separate payment.

Payment for "Concrete Safety Barrier (*) (Temporary)", "Concrete Safety Barrier (*) (Temporary-Installation Only)", and "Concrete Safety Barrier (*) (Temporary-Relocate)" at the contract unit prices is full compensation for the specified work.

The quantities shown in the Contract Documents for the various items of temporary precast concrete safety barrier are estimated. The contract unit prices will not be adjusted, regardless of overruns or underruns.

SECTION 810

INERTIAL BARRIER SYSTEM

810.1 DESCRIPTION

Install and relocate inertial barrier systems as shown in the Contract Documents. Stockpile the replacement modules at the project site.

BID ITEMS	UNITS
Inertial Barrier System	Each
Replacement Modules (*)	Each
*Series	

810.2 MATERIALS

Provide aggregate for underdrains, UD-1 or fine aggregate for concrete, FA-A or FA-B that complies with **DIVISION 1100**.

Provide inertial barrier systems and replacement modules that comply with **DIVISION 1700**.

Provide commercially available rock salt. The Engineer will accept the rock salt based on visual inspection at the point of usage.

810.3 CONSTRUCTION REQUIREMENTS

Provide the Engineer with the manufacturer's product data sheets for the inertial barrier system. Install the inertial barrier system according to the manufacturer's recommendations.

Fill the inertial barrier system modules with a mixture of 95% aggregate and 5% rock salt by weight. Use aggregate with a moisture content of 3% or less by weight, determined according to **DIVISION 2500**. Fill each of the modules with any of the specified mixture of aggregates and rock salt. Do not mix the types of aggregates within a module.

When shown in the Contract Documents relocate the inertial barrier system.

Install replacement modules of the inertial barrier system when damaged by traffic.

Unless otherwise noted in the Contract Documents, the inertial barrier system and replacement modules are the property of the Contractor upon completion of the project.

810.4 MEASUREMENT AND PAYMENT

The Engineer will measure each inertial barrier system. Each unit will be measured only once, even if the unit is relocated on the project.

The Engineer will measure each replacement module used on the project. The quantity of replacement modules stockpiled on the project site, but not used on the project, will not be measured for payment.

Payment for each for "Inertial Barrier System" and "Replacement Modules" at the contract unit prices is full compensation for the specified work.

SECTION 811

IMPACT ATTENUATOR

811.1 DESCRIPTION

Install the impact attenuation devices at the locations designated in the Contract Documents.

BID ITEM	UNITS
Impact Attenuator (*)	Each
*Type	

811.2 MATERIALS

a. Impact Attenuator. Provide the type and model of impact attenuator designated in the Contract Documents or an approved equivalent.

The Engineer will accept the impact attenuators based on the brand name and model, and visual inspection for condition at the point of usage.

b. Materials for Permanent Base. Provide concrete and reinforcing steel that comply with **DIVISIONS 400** and **1600**, respectively.

811.3 CONSTRUCTION REQUIREMENTS

Construct the reinforced concrete base according to the applicable portions of **DIVISION 700** and as shown in the Contract Documents.

Provide the Engineer with a printed copy of the manufacturer's recommendations for installation of the impact attenuator. Install the impact attenuation device according to the manufacturer's recommendations.

811.4 MEASUREMENT AND PAYMENT

The Engineer will measure each impact attenuator.

Payment for the "Impact Attenuator" at the contract unit price is full compensation for the specified work.

SECTION 812

PERMANENT SIGNING

812.1 DESCRIPTION

Install highway signs, delineators and object markers as shown in the Contract Documents.

BID ITEMS	UNITS
Sign (*1) (High Performance)	Square Foot
Sign Post (4" x 6" Wood) (*2)	Linear Foot
Sign Post (*3 Steel Beam)	Linear Foot
Sign Post (*4 U Steel)	Linear Foot
Sign Post (*5 Perforated Square Steel Tube)	Linear Foot
Sign Post (4" x 6" Structural Steel)	Linear Foot
Sign Post (3 I 2.25 Aluminum)	Linear Foot
Sign Post Stub and Breakaway Base Plate (*3)	Each
Sign Post Breakaway Base Plate (*3)	Each
Sign Post Footing (*6 Concrete)	Linear Foot
Sign Post Footing (*5 Perforated Square Steel Tube)	Each
Signing Object Marker (*7)	Each
Signing Delineator (*8) (*9 Rigid, "U" Post)	Each
Signing Delineator (*8) (*9 Flexible) (*10 Anchor)	Each
Signing Delineator (*8) (*9 Bracket)	Each
Sign (Remove and Reset)	Lump Sum

*1Type of substrate: Flat Sheet, Reinforced Panel or Overlay
*2Type of sign: Flat Sheet Sign or Reinforced Panel Sign
*3Size and weight of post: W 6 x 9, W 10 x 12 or W 10 x 22
*4Weight per foot: 2 lbs./ft. or 3 lbs./ft.
*5Size of post: 1¾ inch, 2 inch, 2¼ inch or 2½ inch
*6Diameter: 18 inch wood post, 24 inch steel beam post or 30 inch steel beam post
*7Type: Type 2 or Type 3
*8Type: Type A or Type B
*9Color: Yellow or White
*10Type: Type 1 or Type 3

812.2 MATERIALS

a. Materials for Permanent Signs.

(1) Provide Grade 3.0 concrete for sign post footings that complies with **DIVISION 400**.

(2) Provide asphalt material for sealing gaps between the wood posts and the concrete footings approved by the Engineer.

(3) Provide steel reinforcement bars, structural steel tubes, anchor bolts, steel fasteners, steel sign posts, steel delineator posts, aluminum sign blanks, aluminum sign overlay panels, aluminum I-beams, aluminum Z-bars and aluminum post clips that comply with **DIVISION 1600**.

(4) Provide organic zinc-rich paint for repairing damaged spelter coatings that complies with **DIVISION 1800**.

(5) Provide retroreflective sheeting, process inks and flexible delineator posts and anchoring devices that comply with **DIVISION 2200**.

(6) Provide wood posts and preservative treatment of and drilled holes that comply with **DIVISION 2300**.

b. Shop Fabrication of Signing Items.

(1) Flat Sheet Signs. Provide flat sheet sign blanks that comply with the Contract Documents. Remove warps, burrs and other defects.

(2) Reinforced Panels. Provide reinforced panels of either extrusheet or extruded fabrication that comply with the Contract Documents and these requirements:

- Cut the ends of all panels at 90º angles to within ⅛ inch of the length shown in the Contract Documents.
- If the panel is extrusheet fabrication, do not exceed a $^{1}/_{32}$ inch mismatch between the edge of the sheet and the extrusion it is fastened to.
- Remove warps, burrs and other defects.

(3) Flat Sheet Sign Blank and Reinforced Panel Preparations. After fabrication, prepare the metal for sheeting application using a Class 2 chromate conversion coating according to ASTM B 449, "Standard Recommended Practice for Chromate Treatments on Aluminum".

Handle the metal with a mechanical device or clean canvas gloves, between the etching operation and application of retroreflective sheeting. Prevent the metal from coming in contact with greases, oils or other contaminants before the application of sheeting, films or inks.

(4) Application of Retroreflective Sheeting. Use either heat activated or pressure sensitive retroreflective sheeting of the color shown in the Contract Documents.

Apply the sheeting to the treated blanks and panels according to the manufacturer's recommendation, or by a method that will produce an equivalent result.

During fabrication of sign faces comprised of 2 or more pieces of retroreflective sheeting on reinforced panels, carefully match adjacent pieces of sheeting for color to provide uniform appearance and brilliance under both day and night illumination. Any apparent contrast between adjacent pieces of applied sheeting or panels is cause for rejection of the sign.

Overlap pressure sensitive sheeting a minimum of $^{3}/_{16}$ inch at splices. If heat activated sheeting is spliced, the minimum overlap is $^{3}/_{16}$ inch. If adjacent sheets of heat activated sheeting are butted together, the gap between adjacent sheets may not exceed $^{1}/_{32}$ inch.

On reinforced panel signs, vertical splices a minimum of 4 feet apart are permitted.

On flat sheet signs, 1 vertical or horizontal splice is permitted. Make horizontal lap splices with the uppermost piece overlapping the lower piece. Splicing is prohibited if the sign face is made using the reverse screen process.

(5) Sign Legend and Border Details. Provide sign legend and border that complies with the requirements specified in the Contract Documents.

Use capital letters and numbers that comply with the standard rounded capital letter alphabets in the latest edition of Standard Alphabets for Highway Signs. Use lower case letters that comply with the latest edition of Standard Lower Case Alphabet for Highway Signs. Use initial capital letters that are 1⅓ times the loop height of the lower case letters, from a modified series "E" alphabet in which the stroke width is increased to approximately $^{1}/_{5}$ of the height of the letter or number.

Make the sign face for flat sheet signs using one of these processes:

- Direct Screen: the legend and border color is applied to the face of the sign by the silkscreen process.
- Reverse Screen: a transparent color is applied to the face of the sign by the silkscreen process to form the legend and border.
- Direct Applied: the legend and border is retroreflective sheeting applied to the face of the sign by the appropriate methods.

Use the Direct Applied process to make the sign face for reinforced panel signs.

(6) Application of Process Inks and Lettering Films. Use the color of film or ink to obtain the sign face, legend and border as shown in the Contract Documents.

Apply process inks to the sign faces according to the retroreflective sheeting manufacturer's recommendation, or by a method that will produce an equivalent result. Apply lettering films to the sign faces according to the lettering film manufacturer's recommendation, or by a method that will produce an equivalent result.

(7) Sign Identification. Paint the following legend on the back of each sign with black, exterior grade (non-water based) paint:

Sign Number .....(by sign fabricator)
Erection Date .....(by sign installer) (month-day-year)

Locate the legend horizontally, vertically or diagonally along the bottom or right edge of the sign in a position that is not covered up when the sign is installed.

On a sign with an area of less than 16 square feet, the legend shall be a minimum of ½ inch in height. On a sign with an area of 16 square feet or more, the legend shall be a minimum of 1 inch in height.

In lieu of painting the legend on the back of the signs, the Contractor has the option to use clear or light colored, pressure sensitive decals with a printed (not handwritten) black legend.

(8) Sign Overlays. Provide sign overlays that comply with the Contract Documents. Fabricate the sign overlays from flat sheet blanks covered with retroreflective sheeting. Prepare the flat sheet blanks and apply the retroreflective sheeting as specified for flat sheet signs. Apply the legend and border to the retroreflective sheeting as specified for the flat sheet sign.

(9) Delineators. Provide the types of delineators specified in the Contract Documents.

Fabricate delineators for steel post mount or bracket mount from flat sheet blanks covered with retroreflective sheeting. Prepare the flat sheet blanks and apply the retroreflective sheeting as specified for flat sheet signs.

(10) Object Markers. Provide the type of object markers specified in the Contract Documents.

Fabricate Type 1 object markers from 18 inch by 18 inch flat sheet blanks covered with yellow high performance retroreflective sheeting.

Fabricate Type 2 object markers from 6 inch by 12 inch flat sheet sign blanks covered with yellow high performance retroreflective sheeting.

Fabricate Type 3 object markers from 12 inch by 36 inch flat sheet blanks covered with yellow high performance retroreflective sheeting with black non-reflective hash marks as shown in the Contract Documents.

Prepare the flat sheet blanks and apply the retroreflective sheeting as specified for flat sheet signs.

(11) Fabrication of Sign Posts. The total length of posts shown in the Contract Documents is estimated. The number, type and size of posts shown in the Contract Documents are determined from theoretical sections. Do not order sign posts until the Engineer provides the length of each post for the sign or the sign assembly based on actual field measurements (**see subsection 812.3c.**).

Wood posts, steel "U" posts and perforated square steel tube posts may be ordered in stock lengths and cut to the required length in the field. Do not torch-cut steel posts. Drill breakaway holes in the wood posts at the project site. Treat all field cuts and drilled holes in wood posts with preservative material. Paint all cut ends of steel posts with zinc-rich paint.

Fabricate steel beam posts, base plates and fuse plates to the specified dimensions. Drill the specified holes in the posts and plates. The preferred method of cutting plates is sawcuts; however, flame-cutting is permitted. Grind all edges smooth and remove all burrs projecting beyond the planes of the plate faces, cuts or drilled holes.

After the base plates are galvanized, remove all runs or beads in the areas where washers are placed.

812.3 CONSTRUCTION REQUIREMENTS

a. General. Erect the permanent signing as necessary to expedite the completion of the project and the opening of the highway. The Engineer may require that the Contractor mobilize permanent signing operations whenever it is feasible to complete a portion of the project. The Contractor may have to mobilize and, upon completion of all currently feasible work, suspend the permanent signing operations more than once before the project is completed.

It is the Contractor's responsible to verify the utility locations.

If a temporary sign interferes with the installation of a permanent sign, remove and reset the temporary sign to a location designated by the Engineer.

b. Sign Location and Orientation. Locate and stake each sign installation according to the Contract Documents. Orient the signs in relation to the highway alignment as shown in the Contract Documents.

If the Contract does not include the item of Contractor Construction Staking, the Engineer will stake the location of each sign.

c. Sign Post Lengths. The Engineer will provide the Contractor with the length of each sign post.

If the contract includes Contractor Construction Staking, provide the Engineer with the information necessary to determine the length of each sign post. Provide the Engineer with the vertical and horizontal measurements from the top of the pavement edge to:

- the ground line (for posts with no footings)
- the top of the footing (for posts with footings)
- the top of the stub post base plate (for steel beam breakaway posts)

If the Contract does not include the item of Contractor Construction Staking, the Engineer will obtain the measurements necessary to determine the length of each sign post.

d. Sign Post Installation.

(1) Footings.

(a) Post Holes for Wood Posts. Excavate the post holes to the shape and dimensions shown in the Contact Documents. Prevent water from entering the excavated holes.

(b) Concrete Footings for Wood Posts and Steel Beam Stub Posts. Excavate the footings to the shape and dimensions shown in the Contract Documents. Remove all non-compacted material from the excavation. Form the top 12 inches of the footings. Place the reinforcing steel and post sleeves or stub posts in the footings as shown in the Contract Documents. Vibrate the concrete placed in the footings and finish the footings as detailed in the Contract Documents. Backfill the footings as detailed in the Contract Documents, placing the backfill soil in uniform layers (maximum layer of 8 inches, loose measurement), and compact each layer until no further consolidation is observed.

(c) Perforated Square Steel Tube Post Footings. Install the perforated square steel tube post footings plumb as shown in the Contract Documents. Do not damage the galvanized coating during installation or alter the cross-sectional dimensions of the perforated square steel tubes. Remove and replace any footing damaged during the perforated square steel tube installation.

(2) Post Installation. Install the posts as shown in the Contract Documents. Plumb the sign posts as they are installed. The maximum allowable tolerance from vertical is 1 inch (from the top of the post to the ground line).

(a) Wood Posts in Soil. Place the posts in the post holes, plumb the posts and backfill with the soil from the post hole excavation in uniform layers (maximum layer of 8 inches, loose measurement) around the posts, and compact each layer to the original ground line until no further consolidation is observed. After backfilling, drill breakaway holes in the posts as shown in the Contract Documents. Treat the breakaway holes with preservative materials.

(b) Wood Posts in Concrete Footings. After curing, place the posts into the post sleeves, plumb the posts, secure the posts with wedges and seal the gaps between the posts and the post sleeves with asphalt material. Drill breakaway holes in the posts as shown in the Contract Documents after the posts are secured. Treat all field cuts and drilled holes in wood posts with materials for preservative treatment.

(c) Steel Beam Breakaway Posts. After curing, place the steel beam post with base plate onto the stub post base plate, plumb the post and tighten the base plate bolt assemblies as detailed in the Contract Documents. Attach the structural tubing to the steel posts.

(d) Perforated Square Steel Tube Posts. Install and attach the perforated square steel posts in the footings as detailed in the Contract Documents.

(e) Steel "U" Posts. Install the posts by driving. Do not alter the cross-sectional dimensions of the posts or damage the coating during installation. Remove and replace damaged posts.

e. Sign Installation. Mount the signs as shown in the Contract Documents. Position the signs so the sign face is vertical. If required for installation, drill the holes in the fabricated signs from the sign face sheeting side.

After the sign is installed, the post shall be plumb and secure in the ground.

Repair damaged retroreflective sheeting on the sign faces. Use pressure sensitive retroreflective sheeting to patch the damaged areas, overlapping the damages area a minimum of ¼ inch. Match the retroreflective sheeting patch to the adjacent pieces of sheeting for color and uniform appearance and brilliance under both day and night illumination. Repair damaged galvanized areas on posts and structural members by cleaning and painting with zinc-rich paint.

f. Delineators and Object Markers. Install delineators and object markers as shown in the Contract Documents.

g. Remove and Reset Existing Signs. Remove, transport, store and reset existing signs according to the details in the Contract Documents. Provide new bolts, nuts, washers, post clips and other attachments as necessary to reset the existing signs. When directed by the Engineer, repair or replace all existing signs damaged during the removal and resetting operations at own expense.

812.4 MEASUREMENT AND PAYMENT

The Engineer will measure the finished face of flat sheet signs, reinforced panel signs and sign overlays by the square foot.

The Engineer will measure wood posts, steel beam posts, "U" steel posts, perforated square steel tube posts, structural steel posts, aluminum posts and concrete footings by the linear foot. If the alternate grade of steel beam posts is provided, the measurement is based on the primary grade steel size and weight posts.

The Engineer will measure various sizes and types of each sign stub post with breakaway base plate, sign post breakaway base plate, perforated square steel tube sign post footing, object marker and delineator.

The Engineer will measure removal and resetting of existing sign by the lump sum.

Payment for the various permanent signing bid items at the contract unit prices is full compensation for the specified work.

SECTION 813

RUMBLE STRIPS (MILLED) AND RUMBLE STRIPS (MILLED) (CENTERLINE)

813.1 DESCRIPTION

Construct milled rumble strips in the existing paved shoulders by milling concave depressions into the shoulder surfaces as shown in the Contract Documents. Construct milled centerline rumble strips in the existing paved centerline by milling concave depressions into the centerline surfaces as shown in the Contract Documents.

BID ITEMS	UNITS
Rumble Strips (Milled) (*)	Station
Rumble Strips (Milled) (*) (Centerline)	Station

*Asphalt or Concrete

813.2 MATERIALS - None specified.

813.3 CONSTRUCTION REQUIREMENTS

a. General. Use equipment capable of milling the concave depressions with a smooth cut to the dimensions shown in the Contract Documents. Use equipment with the milling head suspended independently from the machine, and that will self-align (parallel to the shoulder surface) with the surface of the paved shoulder regardless of the shoulder slope. Mill the concave depression to obtain a relatively smooth surface, with a maximum tolerance of ⅛ inch between peaks and valleys.

Before beginning work on the project, demonstrate to the Engineer, the ability to achieve the specified rumble strip depressions with regard to dimensions, alignment, smoothness and consistency. Construct a test strip approximately 75 feet longitudinally, at a site mutually agreed upon between the Engineer and Contractor, to demonstrate compliance with the requirements.

b. Rumble Strips (Milled). Clean the shoulders before constructing the rumble strips. Mill the concave depression to the dimension shown in the Contract Documents. Align the concave depressions as shown in the Contract Documents.

c. Rumble Strips (Milled) (Centerline). Clean the centerlines before constructing the rumble strips. Mill the concave depression to the dimension shown in the Contract Documents. Align the concave depressions as shown in the Contract Documents.

d. Clean Up. After the concave depressions are milled into the surface, use a power broom or sweeper/vacuum to collect the waste material resulting from the milling operations. Unless specified otherwise in the Contract Documents, uniformly spread the waste material just off the edge of the paved shoulder.

813.4 MEASUREMENT AND PAYMENT

The Engineer will measure rumble strips by the station for each shoulder longitudinally along the edge of the pavement.

The Engineer will measure centerline rumble strips by the station longitudinally along the centerline of the pavement.

The Engineer will not measure bridge decks, acceleration/deceleration lanes and other sections where rumble strips are not constructed.

Payment for "Rumble Strips (Milled)" and "Rumble Strips (Milled) (Centerline)" at the contract unit price is full compensation for the specified work.

SECTION 814

ELECTRIC LIGHTING SYSTEMS AND TRAFFIC SIGNALS

814.1 DESCRIPTION

Install electric lighting systems and traffic signal items as shown in the Contract Documents.

BID ITEMS	UNITS
Electric Lighting System	Lump Sum
Electric Conduit (*) (**)	Linear Foot
Electric Service Box	Each
Traffic Signal	Lump Sum
Traffic Signal Interconnect	Lump Sum
Emergency Vehicle System	Lump Sum

*Size
**Type: Metallic or Non-metallic, no entry denotes either is allowed.

814.2 MATERIALS

a. General. Provide equipment and materials for electric lighting system and traffic signal items that comply with **DIVISION 1700**. Provide all parts necessary to complete the electric lighting system or traffic signal or modify existing systems. Before starting any construction activities, submit for the Engineer's approval, a schedule of all equipment and materials for the highway lighting system or traffic signal. Submit 7 copies of catalog cuts, diagrams and drawings to the Bureau of Traffic Engineering. The Engineer will accept or reject the equipment or materials within 2 weeks.

For concrete foundations, use Grade 3.0 concrete that complies with **DIVISION 400**, and steel reinforcement that complies with **DIVISION 1600**, unless shown otherwise in the Contract Documents.

b. Standard Fabrication. Fabricate the standards as shown in the Contract Documents.

Provide straight standards with a maximum variation of 1 inch at the mid-point of 30 to 45 foot standards and ¾ inch at the mid-point of 20 to 30 foot standards. A maximum static deflection (without wind load) of 4 inches is permitted for poles less than 30 feet in height and 4 ½ inches for poles 30 feet or greater in height. Measure static deflections with mast arms and luminaries in place.

The design of the standard, the mast arm and method of attaching the mast arm to the standard must be approved by the Engineer.

814.3 CONSTRUCTION REQUIREMENTS

a. Codes and Regulations. Perform all electrical work according to:

- National Electric Code.
- National Electric Safety Code.
- Regulations of the National Board of Fire Underwriters.
- Local ordinances.
- Details in the Contract Documents.

Before starting any work on existing street lighting and circuits, obtain daily safety circuit clearance from the serving company. Before beginning work, pull cut-out plugs and warning signs posted at cut-out boxes.

b. General.

(1) Provide and install all incidental parts not shown in the Contract Documents which are necessary to complete the electrical system or traffic signal or modify existing systems as shown in the Contract Documents. All utility hookups are subsidiary, unless shown otherwise in the Contract Documents.

(2) Provide continuous welds that develop the full strength of the member.

(3) Perform welds by the submerged arc process.

(4) Grind exposed welds flush with the base material.

(5) Smoothly finish all exposed edges of plates which make up the base assembly. Round all exposed corners of such plates to ⅛ inch radius.

c. Removals and Excavations. Perform removals of existing structures and excavations to minimize damage to existing structures and right-of-way.

Remove the existing concrete foundations (including anchor bolts) to the elevation shown in the Contract Documents.

Limit the excavation for the conduits, foundations and other appliances to that necessary for the installation of the equipment and materials. Do not excavate until immediately before installing the equipment and materials.

Place plastic warning tape (12 inches below the surface) directly over conduit.

Place excavated material where the least damage and obstruction to vehicles and pedestrian traffic will occur. Do not impede surface drainage.

At the end of each day's work and at all times when construction operations are suspended, remove all equipment and other obstructions from the portion of the roadway open for use by public traffic.

d. Backfill. Place the backfill material in uniform layers (maximum 6 inches compacted) evenly on all sides of the structure. Compact the backfill using pneumatic tampers, vibratory compactors or other equipment approved by the Engineer. Compact the backfill to comply with the Contract Documents. If backfill requirements are not specified, compact each layer until no further consolidation is observed.

Remove surplus excavated material from the project and dispose on sites approved by the Engineer. Reseed the areas disturbed by the excavations. Hand seeding methods may be used.

e. Replacing Damaged Improvements. Replace all sidewalks, curbs, gutters, pavements and other improvements removed or damaged during installations of the lighting systems or traffic signals. Replace or reconstruct the removed or damaged improvements with the same type and quality of materials originally used. If part of an existing slab of concrete pavement or square of sidewalk is removed or damaged, replace the entire slab or square.

f. Foundations.

(1) Concrete Foundations. Form the foundations and place the concrete according to **DIVISION 700**. Hold conduit ends and anchor bolts securely in the proper position when the concrete is placed.

Cure the concrete foundations with wet burlap or polyethylene for a period of 72 hours. Prevent concrete temperatures from falling below 32ºF.

Do not attach poles until the concrete has cured for 14 days.

If a foundation can not be constructed as shown in the Contract Documents because of an obstruction, the Engineer will determine how to construct the foundation.

(2) Screw-In Foundation Anchors. Pre-drilling holes for screw-in foundation anchors is prohibited. As the foundation anchors are screwed into the ground, make sure they are plumb. The pole base of the screw-in foundation anchor shall be level when the installation is complete.

Use the connectors to make minor leveling adjustments on poles with breakaway connectors. Use galvanized or cadmium plated shims or washers (maximum thickness ¼ inch) to make minor leveling adjustments on other types of poles. Only 1 shim or washer is allowed on any 1 anchor bolt, with a maximum of 2 shims or washers on any pole.

(3) Removal of Existing Foundations. Remove the designated existing foundations to the depth shown in the Contract Documents. Backfill the resulting holes according to **DIVISION 200**. Dispose of the removed foundations and anchor bolts.

g. Conduit.

(1) Run all conductors between standard locations, either in duct or conduit. Use conduit of the size and type shown in the Contract Documents. If desired, use larger size conduit at no additional cost to KDOT. Use the large size conduit for the entire length of the run from outlet to outlet. Do not use reducing couplings.

When PVC or HDPE is specified, install according to the manufacturer's instructions.

When steel conduit is used, ream the ends of all conduits to remove burrs and rough edges. Make field cuts square and true so the ends will match for the full diameter. Do not use slip joints or running threads for coupling conduit. Use an approved threaded union conduit, if a standard coupling can not be used. Before couplings are made up, paint threads on all conduits with a rust preventative paint. Fit and tighten all couplings until the end of the conduits are brought together. Paint any damaged coating on conduit with rust preventative paint.

Thread and cap all steel conduit ends with standard pipe caps, until wiring is started. When caps are removed, provide threaded ends with approved conduit bushings.

Except factory bends, use conduit bends with a radius of greater than or equal to 6 times the inside diameter of the conduit. Where factory bends are not used, make conduit bends without crimping or flattening, using the longest radius practicable.

Mark the location ends of all conduit for future electrical circuits in structures with a "Y" a minimum of 3 inches high cut in the face of curb, gutter or wall directly above the conduit.

(2) Conduit Entrenched. On electric lighting projects where possible, and on surfacing projects as shown in Contract Documents, install the electrical conduit on straight lines and cover with compacted earth.

Place conduit as shown in the Contract Documents

(3) Conduit Jacked. Use **TABLE 814-1** to determine the conduit depth. Place conduit under existing pavement by approved jacking or drilling methods. Do not disturb pavement without written permission of the Engineer. Keep jacking or drilling pits 2 feet clear of the edge of any type of pavement.

TABLE 814-1: JACKED CONDUIT DEPTH

Location Condition	Minimum Depth
Pavement	24 inches below top of pavement.
Trenches on shoulder and in park areas	24 inches below natural ground level.
Finished surface in street areas	24 inches below the street surface.*
Railroad tracks	42 inches below top of tie.

*Conduit may be laid on top of and secured to the existing pavement in curbed dividing strips.

(4) Vertically extend conduit set in standard bases approximately 3 inches above the foundation, or slope towards the base opening where transformer bases are used. Locate conduit entering through the bottom of a pull box near the ends to leave the major portion of the box clear. Terminate conduit entering concrete pull boxes 2 inches inside the box wall and 2 inches or greater above the bottom and slope to facilitate pulling of cable. At all outlets, enter the conduit from the direction of the run.

For conduit carried through existing culverts or bridge structures, pick up the trenched cable for 3 feet in the ground and run up the face of the culvert headwall to the nearest upper corner or top, through the culvert, down the opposite headwall and into the ground for 3 feet. Fasten conduit to concrete surfaces by means of approved clamps and fasteners.

Clean existing underground conduit to be incorporated into a new system with a mandrel, and blow out with compressed air.

Conduit runs shown in the Contract Documents may be changed with approval of the Engineer to avoid underground obstructions.

h. Electric Service Boxes. Install electric service boxes as shown in the Contract Documents.

i. Pull Boxes. Install pull boxes as shown in the Contract Documents. To facilitate work, additional pull boxes may be used at the Contractor's expense.

j. Expansion Fittings. Install expansion fittings as shown in the Contract Documents, where conduit crosses an expansion joint in the structure. Provide each expansion fitting with a bonding jumper of No. 6 A.W.G. copper wire or equal.

k. Wiring. Neatly arrange and lace up wiring within junction boxes, transformer bases and on standards, etc.

Do not splice cable in conduit or outside of pull boxes, splice boxes or standards, unless shown in the Contract Documents. When not fastened to existing structure or carried through conduit, lay conductor cable to the depth shown in the Contract Documents.

Use powdered soapstone, talc or other approved lubricant when inserting conductors in conduit.

Pencil, trim to conical shape and roughen conductor insulation before applying splice insulation.

When conductors and cables are pulled into the conduit, tape all ends to exclude moisture until the splices are made or terminal appliances are attached.

l. Bonding and Grounding. When a closed system enclosed in conduit is used, bond metallic cable sheaths, conduit and metal standards to form a continuous system, and effectively ground. When an open system such as an overhead wiring or direct burial underground is used, effectively ground only standards and service points, except where conduit runs used under pavement cross a water system.

Install ground electrodes as shown in the Contract Documents.

m. Traffic Signal Interconnect. Install traffic signal interconnects as shown in the Contract Documents.

n. Emergency Vehicle System. Install emergency vehicle systems as shown in the Contract Documents.

o. Operating Instructions. Provide all operating instructions to the Engineer.

814.4 MEASUREMENT AND PAYMENT

If shown as a bid item in the contract, the Engineer will measure electrical conduit by the linear foot from the outside edge to outside edge of service boxes, junction boxes or traffic light footings.

Excavation, backfilling and Grade 3.0 concrete are subsidiary.

The Engineer will measure electric lighting systems, traffic signal installations, emergency vehicle systems and traffic signal interconnects by the lump sum.

The Engineer will measure each electric service box.

Payment for "Electric Lighting System", "Electric Conduit", "Electric Service Box", "Traffic Signal", "Traffic Signal Interconnect" and "Emergency Vehicle System" at the contract unit prices is full compensation for specified work.

SECTION 815

CATCH BASINS, INLETS, OUTLETS, MANHOLES, JUNCTION BOXES AND OTHER EXISTING STRUCTURES

815.1 DESCRIPTION

Install catch basins, inlet, outlets, manholes and junction boxes as shown in the Contract Documents.

BID ITEMS	UNITS
Catch Basin*	Each
Inlet*	Each
Outlet*	Each
Manhole*	Each
Junction Box	Each

*Type

815.2 MATERIALS

Provide materials that comply with the applicable requirements.

Concrete and Mortar ..... **DIVISION 400**
Reinforcing Steel ..... **DIVISION 1600**
Gray Iron Castings ..... **DIVISION 1600**
Steel Castings ..... **DIVISION 1600**
Structural Steel ..... **DIVISION 1600**
Brick ..... **DIVISION 1300**
Manhole Steps ..... **DIVISION 1700**

815.3 CONSTRUCTION REQUIREMENTS

a. Excavation. Comply with **SECTION 204**.

b. Concrete. Comply with **DIVISION 700** for concrete form work, placing, curing and protection. Use Grade 3.0 concrete, unless shown otherwise in the Contract Documents.

c. Masonry. If shown in the Contract Documents, brick masonry or concrete masonry units may be used in place of concrete for the walls of catch basins, manholes or curb inlets. Masonry manholes may be constructed circular with an inside diameter equal to the greater of the inside dimensions indicated in the Contract Documents for the concrete manhole.

When masonry is used in place of concrete for square or rectangular structures, use the inside dimensions of the structure shown in the Contract Documents.

Use mortar for masonry as specified in **DIVISION 400**. Lay the brick or concrete masonry units with full mortared joints and with sufficient header courses to tie the masonry together properly.

d. Reinforcement. Comply with **DIVISION 700**.

e. Placing Castings. Set castings in full mortar beds or as shown in the Contract Documents. Mix mortar for setting castings as specified in **DIVISION 400**. Set castings to correct elevation so no adjustment is required.

f. Backfilling. Comply with **SECTION 204**.

g. Cleaning. Clean all catch basins, manholes, inlets, outlets, etc. from any accumulation of silt and debris.

h. Painting. Paint structural steel cover plates with 1 shop coat of an approved primer, 1 field coat of aluminum paint (tinted) and 1 field coat of aluminum paint. Perform painting as specified in **SECTION 714**. Painting of castings is not required unless shown in the Contract Documents.

i. Pre-Cast Units. Use pre-cast units when shown in the Contract Documents. If the Contract Documents do not contain fabrication details for the pre-cast unit, submit 6 copies of shop drawings (**subsection 105.10**) to the Engineer for approval.

815.4 MEASUREMENT AND PAYMENT

The Engineer will measure each catch basin, inlet, outlet manhole and junction box.

Masonry and pre-cast units will not be measured or paid for as a separate item but will be paid for as the completed unit as provided above.

Payment for "Catch Basins", "Inlets", "Outlets", "Manholes" and "Junction Boxes" at the contract unit prices is full compensation for the specified work, however the unit bid price will be adjusted according **TABLE 815-1** for increases and decreases in the height indicated in the Contract Documents.

TABLE 815-1: CHANGE IN HEIGHT PAYMENT ADJUSTMENTS

Change in Height (feet)	Increment of Increases or Decreases in Unit Bid Price	Total Increase or Decrease
0 to 0.49	None	None
0.50 to 1.00	7.5%	7.5%
1.01 to 2.00	10.0%	17.5%
2.01 to 3.00	12.5%	30.0%

For change in height of more than 3.00 feet, the increment of increase or decrease is 15% for each foot or fraction over 3.00 feet.

OSHA requires different construction procedures and safety requirements when excavated depths reach 5.0 feet or greater. In consideration of this, if a plan height of less than 5.0 feet is adjusted to a height of 5.0 feet or greater, or a plan height of 5.0 feet or greater is adjusted to a height of less than 5.0 feet, an additional 25% of the unit price will be added or deducted from the bid price. This is in addition to normal correction applied from the **TABLE 815-1**.

SECTION 816

ADJUSTMENT OF INLETS, MANHOLES AND OTHER EXISTING STRUCTURES

816.1 DESCRIPTION

Adjust inlets, manholes and other existing structures as shown in the Contract Documents.

BID ITEMS	UNITS
Adjustment of Catch Basins	Each
Adjustment of Curb Inlets	Each
Adjustment of Manholes	Each
Structural Steel	Pound
Cast Steel	Pound
Cast Iron	Pound

816.2 MATERIALS

Provide materials that comply with the applicable requirements.

Concrete and Mortar ..... **DIVISION 400**
Reinforcing Steel ..... **DIVISION 1600**
Gray Iron Castings ..... **DIVISION 1600**
Steel Castings ..... **DIVISION 1600**
Structural Steel ..... **DIVISION 1600**
Brick ..... **DIVISION 1300**

816.3 CONSTRUCTION REQUIREMENTS

Carefully remove and reinstall or store structural steel or cast fixtures for future use by the owners as shown in the Contract Documents. If the height of brick walls is increased, the addition may be of brick, masonry units or Grade 3.0 concrete, unless shown otherwise in the Contract Documents. Masonry brick salvaged from the project and in good condition may be used to increase the height of the walls. If no bricks are salvaged, provide new brick or concrete blocks. Place masonry, concrete and castings according to **DIVISION 800**.

816.4 MEASUREMENT AND PAYMENT

The Engineer will measure each adjustment of catch basin, inlet and manhole.

The Engineer will measure Structural Steel, Cast Steel and Cast Iron by the pound as provided in **DIVISION 700**.

Payment for "Adjustment of Catch Basins", "Adjustment of Curb Inlets", "Adjustment of Manholes", "Structural Steel", "Cast Steel" and "Cast Iron" at the contract unit prices is full compensation for the specified work.

SECTION 817

PIPE CULVERTS, EROSION PIPE, STORM SEWERS, SANITARY SEWERS AND END SECTIONS

817.1 DESCRIPTION

Install the size and type of pipe culvert, erosion pipe, storm sewer, sanitary sewer, end section and concrete headwall specified in the Contract Documents.

BID ITEMS	UNITS
Entrance Pipe (*) (**) (+) (++)	Linear Foot
Cross Road Pipe (*) (**) (+) (++)	Linear Foot
Erosion Pipe (*) (**) (+) (++)	Linear Foot
Liner Pipe (*) (**)	Linear Foot
Storm Sewer (*) (**)	Linear Foot
Sanitary Sewer (*) (**)	Linear Foot
End Section (*) (**) (+) (++)	Each
Concrete Headwall	Each
Fly Ash Slurry Grout (xx)	Cubic Yard

*Size
**Type
+Provide Only
++Install Only
xx High Strength or Low Strength

TYPES OF PIPES

RCP - Round Reinforced Concrete Pipe
RCPA - Reinforced Concrete Pipe-Arch
RCPHE - Reinforced Concrete Pipe Horizontal Elliptical
CMP - Round Corrugated Metal Pipe
CMMAC - Corrugated Metal - Metal Arch Culvert
CSP - Galvanized Round Corrugated Steel Pipe
CSMAC - Galvanized Corrugated Steel - Metal Arch Culvert
ACSP - Aluminized (Type 2) Round Corrugated Steel Pipe
ACSMAC - Aluminized (Type 2) Corrugated Steel - Metal Arch Culvert
PEP - Polyethylene Pipe
CP-ES - Clay Pipe - Extra Strength
CP - Clay Pipe - Standard Strength
CIP - Cast Iron Pipe
CIPP - Cast Iron Pressure Pipe
CISP - Cast Iron Soil Pipe
PVCP - Polyvinyl Chloride Pipe
SP - Steel Pipe
BCCMP-FP - Corrugated Metal Pipe - Fully Paved
BCCSP-FP - Corrugated Steel Pipe - Fully Paved
HDPE - High Density Polyethylene - Liner Pipe

TYPES OF END SECTIONS

RC - Round Reinforced Concrete
RCA - Reinforced Concrete Arch
RCHE - Reinforced Concrete Horizontal Elliptical
CM - Round Corrugated Metal
CMMA - Corrugated Metal - Metal Arch
CS - Galvanized Round Corrugated Steel
CSMA - Galvanized Corrugated Steel - Metal Arch

SIZE DESIGNATIONS FOR ARCH CULVERTS AND HORIZONTAL ELLIPTICAL CULVERTS

Bid item size designations for arch culverts and horizontal elliptical culverts are based on minimum waterway requirements, **TABLE 817-1**. Unless shown otherwise in the Contract Documents, provide CMMAC, RCPA or RCPHE.

TABLE 817-1: MINIMUM WATERWAY REQUIREMENTS FOR ARCH CULVERTS AND HORIZONTAL ELLIPTICAL CULVERTS

Bid Item Size Designation (minimum Sq. Ft. area of waterway)	CMMAC (Sq. Ft. area of waterway)	RCPHE (Sq. Ft. area of waterway)	RCPA (Sq. Ft. area of waterway)
1.0	1.1	1.8	1.7
1.5	1.6	1.8	1.7
2.0	2.2	3.3	2.2
2.5	2.8	3.3	2.8
3.0	4.4	3.3	4.4
4.0	4.4	4.1	4.4
5.0	6.4	5.1	6.4
6.0	6.4	6.3	6.4
7.0	8.7	7.4	8.8
8.5	8.7	8.8	8.8
10.0	11.4	10.2	11.4
11.0	11.4	12.9	11.4
12.5	14.3	12.9	14.3
14.0	14.3	16.6	14.3
16.5	17.6	16.6	17.7

a. Pipe Culverts, Erosion Pipe, Storm Sewer & End Sections. Provide the type of pipe specified in the Contract Documents. If the type of pipe and end section is not specified, provide any of the types permitted in **TABLE 1901-1: USES OF PIPES**. Use the same type of pipe base metal (steel) throughout any individual run, installation of pipe or for pipe extensions. Provide end sections of the same type as the pipe, except as follows:

- Provide CS with ACSP,
- Provide CSMA with ACSPMAC,
- Provide CM or RC with PEP.

b. Sanitary Sewer. If there is no entry for type, use vitrified clay. Use cast iron pipe of the bell and spigot type. Clay pipe may be the bell and spigot type or plain-end type.

c. Reinforced Concrete Box Storm Sewer. Construct reinforced concrete box storm sewer in place as shown in the Contract Documents according to **DIVISION 700**.

817.2 MATERIALS

Provide materials that comply with the applicable requirements.

Pipes, Fittings and End Sections ..... **DIVISION 1900**
Steel Encasement Pipe ..... **DIVISION 1600**
Concrete & Fly Ash Slurry Grout ..... **DIVISION 400**
Portland Cement ..... **DIVISION 2000**
Water ..... **DIVISION 2400**
Coarse, Fine and Mixed Aggregates ..... **DIVISION 1100**
Reinforcing Steel ..... **DIVISION 1600**
Plastic Joint Compound ..... **DIVISION 1500**
Material for Sealing Joints in Pipes ..... **DIVISION 1500**
Factory Molded Joints ..... **DIVISION 1500**

Flowable Fill ..... **SECTION 843**

TABLE 817-2: GRADATION OF GRANULAR BACKFILL FOR PEP AND PVCP									
Usage	**Composition**	**Percent Retained - Square Mesh Sieves**							
		1"	**¾"**	**½"**	**⅜"**	**No. 4**	**No. 8**	**No. 40**	**No. 200**
Flexible Pipe Backfill	Sand Gravel, Chat or Crushed Stone. Singly or In Combination	0	0-30	-	-	35-60	50-75	70-90	90-100

- Soundness, minimum 0.85.
- Wear, maximum 45%.
  The soundness and wear requirements do not apply to sand-gravel aggregates having less than 10% retained on the No. 8 sieve.
- Plasticity Index, maximum 8.
- The material shall be free of weeds, sticks, grass roots and other foreign material.
- Test the aggregates according to the applicable requirements of **SECTION 1115**.

817.3 CONSTRUCTION REQUIREMENTS

a. General. If "Provide Only" is specified, provide and deliver the pipe, coupling bands and end sections to the storage location shown in the Contract Documents.

If "Install Only" is specified, KDOT will provide the pipe, coupling bands and end sections. The location of the materials is shown in the Contract Documents.

If neither "Provide Only" or "Install Only" is designated, provide and install the pipe, coupling band and end sections as shown in the Contract Documents.

Excavate for, and form the foundation bed for the pipe culvert according to **SECTION 204**.

Use Grade 3.0 concrete to construct headwalls for erosion pipe. Perform formwork, placing, curing and protection of concrete according to **DIVISION 700**.

(1) Excavation. Beginning at the outlet end and proceeding toward the upper end, excavate the bottom of the channel to the line, grade and elevation shown in the Contract Documents. Construct the width of the trench sufficient to lay and backfill the pipe with a minimum width equal to the diameter of the pipe plus 6 inches on each side. Follow OSHA safety regulations for sloping the sides of excavations. Use shoring and bracing as required. Do not disturb railroad or existing street or highway, when tunneling underneath is required (See **SECTION 819** for tunneling, jacking or boring requirements). Methods of tunneling are subject to Engineer approval. When it is required to remove an existing street or highway surface in constructing the pipe or sewer, replace the surface with an equivalent material at Contractor's expense, unless otherwise shown in the Contract Documents. Firm the foundation in the trench to prevent subsequent settlement removing soft unstable materials and replace with suitable materials. If the foundation is in rock, place an equalizing bed a minimum of 6 inches thick of well-compacted sand or similar material upon the rock. If the foundation is on firm earth, pare or mold the earth to give full support to each pipe for a depth a minimum of ¼ the external diameter of the pipe. When bell and spigot pipe is used, cut notches to receive the bell. The Contractor may undercut the trench and backfill with well compacted sand or other suitable material to obtain proper, uniform bearing of the storm sewer pipe at no additional cost to KDOT. When shown in the Contract Documents, or ordered in writing by the Engineer, place a concrete cradle or encasement under or around the pipe to provide a suitable foundation for the pipe. Use the dimensions and grade of concrete as shown in the Contract Documents, or as directed by the Engineer.

Excavate pipe according to **subsection 204.3b.(5)**.

(2) Laying. Do not lay pipe until the Engineer approves the foundation bed.

When placing 2 or more pipe culverts adjacent to each other, separate the pipe culverts by a distance equal to a minimum of ½ the diameter of the pipe. The minimum distance for pipe culverts is 18 inches, and the minimum distance for metal arch culverts is 24 inches.

Before installing corrugated steel pipe, repair any damage to the metallic coating on the pipe. Clean the damaged area to bright metal by blast cleaning, power disk sanding or wire brushing. Apply zinc-rich paint over the cleaned area. Use zinc-rich paint to repair both aluminized and galvanized coatings.

Before installing asphalt coated pipe, repair any damage to the asphalt coating on the pipe. Use material that is compatible with the original asphalt coating. The repaired area shall have the same thickness as the original asphalt coating. For erosion pipe, weld any bends or angles prior to applying the asphalt coating.

In finished trenches, start laying pipe at the outlet end so the spigot ends (when bell and spigot pipe is used) point to the direction of flow. Install all pipes true to line and grade, with ends abutting. When using multiple sections of pipe in an individual run, place the longest section at the upstream end, the next longest section at the outlet end, and shorter sections in the middle of the run. When installing helical, corrugated pipe, rotate the sections during installation so that the corrugations on the end of one section match those on the end of the adjoining section. Lay pipe in the bed so the lower portion of each pipe is supported for its entire length to a depth a minimum of ¼ the external diameter of the pipe. When laid in the trench, fit and match pipes to form a smooth, uniform invert. Carefully clean bell ends before pipes are lowered into the trenches. Avoid unnecessary handling in the trench when lowering.

Place sections of corrugated metal pipe with the ends abutting and join with the manufacturer's coupling bands. Install and tighten the coupling bands according to the manufacturer's recommendations.

Sections of clay pipe may be joined using factory molded joints with plain end compression coupling (slip type collar) or bell and spigot type. Cement joints of all other types of pipe over 24 inches in diameter with a cement mortar or plastic joint compound. Use cement mortar composed of 1 part portland cement and 3 parts fine aggregate mixed with sufficient water to form a plastic mortar. As each section of pipe is laid, clean the bell or hub of the preceding pipe and fill the bottom portion with mortar. After the pipe is placed, fill the remaining portion of the joint. Smooth finish and wipe clean the inside of the joint. After the initial set, protect the mortar on the outside from the sun using soil or other approved covering. Prepare and apply plastic joint compound according to the manufacturer's recommendations.

On 24 inch or smaller RCP's, use plastic joint compound to join the sections.

(3) Concrete Headwalls. Construct headwalls for erosion pipe with Grade 3.0 concrete. Formwork, placing, curing and protection of the concrete shall comply with **DIVISION 700**. Place reinforcing steel as shown in the Contract Documents.

(4) Backfilling. Do not begin backfilling the pipe until the Engineer approves the pipe installation. Backfill all trenches and excavated areas with suitable material without disturbing or damaging the pipe.

Backfill trenches within the embankment or beneath entrances, side roads, sidewalks, other intersecting traveled ways, or those designated in the Contract Documents to the required grade in layers 6 inches (maximum, compacted thickness). Compact to Type A compaction according to **SECTION 205**.

On all sewers which do not meet the requirements of the preceding paragraph, carefully deposit and satisfactorily tamp the material in uniform layers a maximum of 6 inches thick until the backfill reaches the top of pipe. Backfill and tamp the remainder of the trench either in uniform layers a maximum of 12 inches thick, or completely fill the trench and settle by satisfactory methods of jetting or flushing. Continue operations until the backfill is slightly above ground level.

Install cover over the erosion pipe according to the Contract Documents. Place the cover in lifts l8 inches (maximum, loose measurement), and compact each lift to Type A compaction, **SECTION 205**. On projects where Type B compaction is required on the adjacent roadway, compact the cover according to Type B compaction, **SECTION 205**. Use hand or mechanical tampers or rollers to achieve compaction.

Backfill pipe culverts according to **SECTION 204**.

When approved by the Engineer, granular material (of sufficient moisture content and that may be adequately rolled or tamped in place) may be used for backfill material. Place granular material in uniform layers a maximum of 12 inches thick. When deemed necessary by the Engineer, terminate the granular backfill material a minimum of 8 inches below the subgrade or ground level, and use suitable soil to backfill the remaining portion.

Dispose of excess material and leave the area in a neat presentable condition.

b. Polyethylene (PE) and Polyvinyl Chloride (PVC), Pipe Storm Sewer. Excavate and form a bed for PE and PVC pipes according to AASHTO LRFD Bridge Design Specifications, Section 12 and the following:

- The minimum trench width is 1 ½ times the pipe diameter plus 12 inches.
- The space between the pipe and the trench wall shall be wider than the compaction equipment used in the pipe zone.
- The trench width in unsupported, unstable soils will depend on the size of the pipe, the stiffness of the backfill and insitu soil, and the depth of cover.

Backfill PE and PVC pipe with either granular backfill or flowable fill, according to **SECTION 204**, with these additions and exceptions:

- If the fill to the top of the subgrade is 3 feet or less, backfill with granular material to the top of the subgrade.
- If the fill to the top of the subgrade is greater than 3 feet, backfill with granular material to a point 1 foot above the top of the pipe.
- Prevent damaging or floating the pipe during the backfilling operations.

The maximum barrel deflection of the pipe (reduction of the barrel base inside diameter) is 5%. Measure the barrel deflection of the pipe using a mandrel. Wait a minimum of 30 days (following the installation and backfilling) before taking the measurement. Remove, reinstall or replace as necessary, any pipes deformed more than 5%.

c. Vitrified Clay Pipe Joints in Sanitary Sewers.

(1) Cement Mortar Joints. Clean the ends of the pipe with a wet brush. Form the joint by tamping a gasket of hemp or oakum saturated in cement mortar into the bell or hub. Completely fill the remaining annular opening with cement mortar composed of 1 part portland cement and 2 parts fine aggregate, mixed with sufficient water to form a plastic mortar. Level off the mortar to an angle of 45° with the outside of the pipe. Fill the inside of the joint with mortar, finish smooth and wipe clean.

(2) Hot Poured Joints. Make the joints after the pipe is clean and dry. Form the joint by tamping a gasket of hemp or oakum into the bell or hub in sufficient quantity to seal the joint without unnecessarily filling the annular space. Fill the remaining annular opening with hot poured asphalt joint material.

(3) Plastic Compound Joints. Prepare and apply the plastic compound used for filling joints according to the manufacturer's recommendations.

(4) Compression Coupling Joint. Install the compression coupling as used with plain-end pipe having factory molded joints according to the manufacturer's recommendations.

d. Cast Iron Pressure Pipes for Sanitary Sewers.

(1) Handling. Do not injure the pipe or pipe coating. Do not place any pipe or material inside of a pipe or fitting after the coating is applied.

(2) Cutting. Cut the pipe without damaging.

(3) Placing and Laying. While suspended in the sling and before lowering into the trench, the Engineer will inspect the pipe for defects by tapping lightly with a hammer. Damaged pipe will be rejected. Carefully embed the pipe with bell holes excavated so each pipe will rest firmly upon its bed for the full length. After placing a length of pipe in the trench, hold the packing material for the joint around the bottom of the spigot so the packing enters the bell as the pipe is pushed into position. Center the spigot in the bell and push the pipe into position in the required alignment. Lay pipe with the bells facing the direction of laying, except where necessary in making connections with other lines. Position a minimum of 2 lengths of pipe ahead of each joint, with packing installed and earth fill tamped alongside the pipe before the joint is poured, except at closures.

(4) Joints. Before jointing bell and spigot pipe, remove all lumps, blisters, excess coating materials, oil and grease from the bell and spigot ends of the pipe. Rub with a wire brush, wipe clean and dry the outside spigot and inside of the bell. Carefully place the packing, and tightly caulk to a uniform thickness. No loose or frayed ends of fiber may protrude into the space to be filled with joint filler. Carefully inspect each joint and check for proper depth before the joint runner is attached. The depth of load in lead filled joints shall be a minimum of 2 ¼ inches back of the face of the bell. In a melting pot near the joint to be poured, heat lead to the proper temperature so that when stirred the surface will show a rapid change in color. Before pouring lead, remove all scum. On the outside of the pipe, dam the pouring gate with clay to fill the joint even with the top of the bell. Make each joint with 1 pour completely filling the joint space. Caulk toward the joint gate to secure tight joints without overstraining the bells. If the packing has been insufficiently caulked, permitting the lead to be driven to a depth more than ¼ inch from the face of the bell at any point during caulking, remove the lead and remake the joint.

e. High Density Polyethylene Liner Pipe. Before installing the liner pipe, push or pull a standard test section of liner pipe, or an approved mandrel of the same length and outside diameter, through the section of pipe being rehabilitated to ensure adequate clearances. Repair or remove any obstructions, protrusions, joint offsets, debris or out-of-roundness that could damage the liner pipe or prohibit passage of the liner pipe during the installation operations.

Provide the Project Engineer with a printed copy of the manufacturer's recommendations for installing the liner pipe. Install the liner pipe according to the manufacturer's recommendations. Install the liner pipe with the assistance of a technical representative of the liner pipe manufacturer. The manufacturer's representative will provide technical expertise pertaining to the installation of the liner pipe and filling the annular space between the existing pipe and liner pipe with fly ash slurry grout.

Fill the space between the liner pipe and the existing structure with fly ash slurry grout, according to the pipe manufacturer's recommendations.

817.4 MEASUREMENT AND PAYMENT

The Engineer will measure all types of pipe by the linear foot, along the centerline of the pipe. Gain in pipe length due to the fit of the pipe sections at the coupling bands or joints is not measured for payment.

The Engineer will measure each end section and concrete headwall.

The Engineer will measure fly ash slurry grout by the cubic yard.

The Engineer will not measure excavation for separate payment.

Payment for "Entrance Pipe", "Cross Road Pipe", "Erosion Pipe", "Liner Pipe", "Storm Sewer", "Sanitary Sewer", "End Section", "Concrete Headwall" and "Fly Ash Slurry Grout" at the contract unit prices is full compensation for the specified work.

SECTION 818

ENCASEMENT PIPE

818.1 DESCRIPTION

Install the size and type of encasement pipe specified in the Contract Documents.

BID ITEM	UNITS
Encasement Pipe (*) (**) (***)	Linear Foot
*Size	
**Type	
***Method	

818.2 MATERIALS

Provide the size and type of encasement pipe specified in the Contract Documents.

818.3 CONSTRUCTION REQUIREMENTS

Install the encasement pipe as detailed in the Contract Documents. The Engineer must approve the methods used to install the encasement pipe.

Connect the encasement pipe as recommended by the manufacturer.

If the Contract Documents specify compaction, backfill and compact the excavation according to **DIVISION 200**.

818.4 MEASUREMENT AND PAYMENT

The Engineer will measure encasement pipe by the linear foot, along the centerline of the pipe.

Payment for the "Encasement Pipe" at the contract unit price is full compensation for the specified work.

SECTION 819

BORED, JACKED OR TUNNELED PIPE

819.1 DESCRIPTION

Install the designated pipe by boring, jacking or tunneling as shown in the Contract Documents. If the method of installation is not specified in the Contract Documents, the Contractor has the option to use any of the 3 methods.

BID ITEMS	UNITS
* (Bored, Jacked or Tunneled)	Linear Foot
*Type and Size of Pipe	

819.2 MATERIALS

Provide materials that comply with the applicable requirements.

Pipe ..... **DIVISION 1600/1900**
Grout ..... **DIVISION 400**

819.3 CONSTRUCTION REQUIREMENTS

a. General. If the pipe is bored, jacked or tunneled under a highway, railroad, street or other structure, the installation of the pipe shall not interfere with the operation of the highway, railroad, street or other structure. Do not weaken or damage existing roadbeds or structures.

If the grade of the pipe (at the point of boring, jacking or tunneling) is below ground, construct the pits or trenches necessary to install the pipe complying with OSHA requirements. Backfill such pits and trenches upon completion of the pipe installation. Compact the backfill to Type A, MR-5-5, **SECTION 205**.

Submit to the Engineer for approval a detailed plan for the proposed method of installing the pipe.

Install the pipe beginning at the lower elevation (downstream) and progressing to the higher elevation (upstream). Do not vary the final position of the pipe from the specified line or grade more than 1 inch in 10 feet. Variations, if any, shall be regular and in one direction. The flowline shall be in the specified direction.

Repair or replace, as determined by the Engineer, all pipes damaged or misaligned during the boring, jacking or tunneling operations.

b. Boring. Use either a pilot hole or the auger method.

(1) Pilot Hole Method. Bore a pilot hole (approximately 2 inches) the length of the crossing. Before boring the larger hole, check the pilot hole for line and grade at the opposite end of the bore from the work pit. The pilot hole serves as the centerline of the larger hole bored later.

(2) Auger Method. Use a steel encasement pipe (of the approximate diameter of the pipe to be installed) equipped with a cutter head to perform the excavation. Use augers of sufficient size to convey the excavated material to the work pit.

In unconsolidated soil formations, the Engineer will permit the use of a gel-forming colloidal drilling fluid (with a minimum of 10% high grade, bentonite) to consolidate the cuttings, seal the walls of the hole, lubricate the removal of the cuttings and lubricate the immediate installation of the pipe.

c. Jacking. Use heavy duty jacks suitable for the intended purpose. Use a jacking head and bracing between the jacks and the jacking head, to apply uniform pressure around the ring of pipe. The Engineer will allow the use of joint cushioning material. Use a jacking frame or backstop. Use guides that support and direct the pipe in the proper line and grade.

As the pipe is jacked, excavate the material just ahead of the pipe (a maximum of 2 feet in advance). Remove the excavated material through the pipe. Excavation for the underside of the pipe, for a minimum of ⅓ of the circumference of the pipe, shall follow the contour and grade of the pipe. Over-excavation (maximum of 2 inches) for the upper half of the pipe is allowed. The over-excavation shall taper to nothing at the point the

excavation conforms to the contour of the pipe. Fill over-excavation in excess of 1 inch with a slurry grout the length of the installation after the pipe is installed.

The Engineer may allow the use of a cutting head of steel plate around the head end of the pipe. The cutting edge may extend a short distance beyond the end of the pipe. Construct (with inside angles or lugs) the cutting edge to prevent it from slipping back into the pipe.

When the pipe jacking operations begin, to the extent possible, continue the operations without interruptions to prevent the pipe from becoming firmly set in the excavation.

d. Tunneling. Use a tunnel lining of sufficient strength to support the overburden. Fill the space between the tunnel lining and the limits of the excavation with slurry grout. Provide access holes in the tunnel lining (maximum spacing of 10 feet) for the grouting operations.

819.4 MEASUREMENT AND PAYMENT

The Engineer will measure pipe by the foot along the centerline of the pipe. Gain in pipe length due to the fit of the pipe sections at the coupling bands or joints is not measured for payment.

Payment for the specified "Pipe (Bored, Jacked or Tunneled)" at the contract unit price is full compensation for the specified work.

SECTION 820

FLUME INLETS AND SLOPE DRAINS

820.1 DESCRIPTION

Construct the designated type of flume inlets and slope drains as shown in the Contract Documents.

BID ITEMS	UNITS
Flume Inlet (*)	Each
Slope Drain (*)	Linear foot

*Type: concrete, grouted stone or stone

820.2 MATERIALS

Provide materials that comply with the applicable requirements.

Concrete and Grout ..... **DIVISION 400**
Stone for Flume Inlets and Slope Drains ..... **DIVISION 1100**
Type 2 Liquid Membrane-Forming Compound ..... **DIVISION 1400**
Reinforcing Steel ..... **DIVISION 1600**
Welded Steel Wire Fabric ..... **DIVISION 1600**

820.3 CONSTRUCTION REQUIREMENTS

a. Concrete. Construct flume inlets and slope drains as shown in the Contract Documents. Excavate to allow construction of forms and excavate to sufficient depth to obtain the designated thickness, elevation and grade.

Prior to concrete placement, place reinforcement for concrete inlets and drains as shown in the Contract Documents. Support reinforcement on bar chairs.

Unless shown otherwise in the Contract Documents, construct concrete flume inlets and slope drains of Grade 3.0 (AE) concrete. Cure and protect concrete according to **DIVISION 700**.

b. Stone and Grouted Stone. Construct stone inlets and slope drains as shown in the Contract Documents. Place stones with ends and sides abutting. Use spalls to fill larger spaces between stones. Offset joints between stones with the joint in the row below. For grouted stone, pour and broom grout into spaces between stones until the spaces are completely filled. Immediately after the grout is placed, cure in the same manner as required for the concrete.

c. Backfill. Place backfill material along the sides of the inlets and slope drains to the top of the outside edges. Compact the backfill to a density of 90% of the standard compaction of the material used. On projects where Type B compaction is required on the adjacent roadway, construct the compaction for flume inlets and slope drains to the requirements for Type B compaction, **SECTION 205**.

820.4 MEASUREMENT AND PAYMENT

The Engineer will measure each flume inlet.

The Engineer will measure slope drains by the linear foot along the flowline of the slope drain.

Payment for "Flume Inlets" and "Slope Drains" at the contract unit prices is full compensation for the specified work.

SECTION 821

FLAPGATES

821.1 DESCRIPTION

Construct the designated flapgate as shown in the Contract Documents.

BID ITEM	UNITS
(*) Flapgate	Each
*Size	

821.2 MATERIALS

Provide materials that comply with the applicable requirements.

Cast Iron ..... **DIVISION 1600**
Structural Steel ..... **DIVISION 1600**

821.3 CONSTRUCTION REQUIREMENTS

Place flapgates as shown in the Contract Documents. Install flapgates to function and operate satisfactorily.
Provide shop drawings as specified in **DIVISION 700**.

821.4 MEASUREMENT AND PAYMENT

The Engineer will measure flapgates by the each.
Payment for "Flapgates" at the contract unit prices is full compensation for the specified work.

SECTION 822

UNDERDRAINS

822.1 DESCRIPTION

Construct the designated type of underdrain as shown in the Contract Documents.

BID ITEMS	UNITS
*Pipe Underdrains (Type **)	Linear Foot
Aggregate for Blanket Underdrains	Ton/Cubic Yard
*Size, Diameter	
**Type:	

822.2 MATERIALS

Provide materials that comply with the applicable requirements.

Concrete and Grout ..... **DIVISION 400**
Aggregates for Backfill ..... **DIVISION 1100**

Underdrain Pipe

Type Designation		
B	Perforated Clay Pipe	**DIVISION 1900**
F	Perforated Corrugated Metal Pipe	**DIVISION 1900**
H	Polyvinyl Chloride Pipe	**DIVISION 1900**
L	Corrugated Polyethylene Tubing	**DIVISION 1900**

Underdrain Outlet Pipe

A	Clay Pipe	**DIVISION 1900**
E	Corrugated Polyethylene Tubing	**DIVISION 1900**
G	Corrugated Metal Pipe	**DIVISION 1900**
K	Polyvinyl Chloride Pipe	**DIVISION 1900**
Special	Clay Drain Tile	**DIVISION 1900**

If the type is not indicated in the Contract Documents, any of the types listed above are permitted. Provide underdrain pipes with a nominal minimum inside diameter of 6 inches, unless shown otherwise in the Contract Documents. Provide perforated and corrugated underdrain pipe with the same type of outlet pipe.

822.3 CONSTRUCTION REQUIREMENTS

a. Excavation for Pipe Underdrains. Excavate trenches for all lateral and longitudinal interceptor drains as shown in the Contract Documents. In case of conflict, where actual elevation of the strata or stratum to be intercepted is found to vary from designated elevation, the stratigraphy shall govern. When necessary, shore or sheet the trench to provide safe construction and backfilling. Construct trench bottoms for perforated pipe in firm material to permit the placing of aggregate for pipe underdrains underneath the pipe. When Type B pipe is used, bed the bells into the backfill material to provide uniform grade and support under the pipe.

If unstable material is encountered in the bottom of the trench, place the drain pipe on an insulating course of aggregate for pipe underdrains of sufficient thickness (maximum 3 inches).
to provide proper movement of water without danger of sealing or mudding off the underdrain, and to maintain proper alignment and grade of the pipe. Insulating courses of aggregate are only permitted under perforated pipe. If the unstable material is also permeable to the extent that water is lost through the bottom of the trench as determined by the Engineer, lower the drain into the impermeable material.

The minimum trench width is 8 inches plus the exterior diameter of the underdrain pipe, unless shown otherwise in the Contract Documents.

b. Excavation for Blanket Underdrains. Perform excavation according to the Contract Documents. Rest the blanket drain upon the bedrock or other suitable material as shown in the Contract Documents. Shape irregularities on the bedrock surface so undrained pockets are not formed. In suitable material, roll and shape the embankment surface to proper crown. Prior to placing aggregate for blanket underdrains, construct pipe underdrains built in connection with the blanket underdrains, as shown in the Contract Documents.

c. Laying Underdrain Pipe. Lay all pipes on a minimum grade of 1%, unless otherwise shown in the Contract Documents. Lay Type B pipe with bell ends upgrade and with the spigots fully extended into the bells. Grout the upper half of the joints. Close all dead ends of pipe underdrains with a concrete cap.

Join metal pipe by means of approved coupling bands provided by the pipe manufacturer. Make all junctions and turns with wyes, tees and bends. When field cutting is required, cold or flame cut metal pipe as approved by the Engineer. Paint cut surfaces with an approved zinc-rich paint.

Lay perforations down, unless shown otherwise in the Contract Documents.

d. Laying Outlet Pipe. Lay outlet pipe only on stable material with minimum of 1% grade, unless otherwise shown in the Contract Documents. Place metal outlet pipe with ends abutting and join with manufacturer's coupling bands to provide a watertight joint. Grout watertight joints of Type A pipe according to **subsection 817.3a.(2)**.

e. Backfilling Pipe Underdrains. Do not begin backfill without approval of the Engineer. Place backfill to prevent large cavities in the backfill and walls of the trench. Backfill overbreakage due to blasting of rock in trench excavation and widening due to caving of trench walls or overbreakage at construction outcrops with aggregate for underdrains.

Where a portion of the trench above the underdrain backfill aggregate is to be filled with soil, use a compactable material. Place the material in layers and compact to a density equal to or greater than that required for the adjacent material, with a minimum of 90% of standard compaction of the soil used.

f. Constructing and Backfilling Blanket Underdrains. Construct the blanket underdrain with a minimum thickness of 12 inches.

When blanket underdrains are constructed over lateral or longitudinal underdrains, remove all debris that may have collected in the top portion of the pipe underdrain backfill so that the aggregate of the blanket underdrain will be in direct contact with the aggregate backfill of the lateral or longitudinal underdrains.

Do not begin backfill without approval of the Engineer. Backfill all irregularities of the bedrock surface with aggregate for blanket underdrains.

Backfill the lateral drain trench under the blanket underdrain and round to an elevation of approximately 6 inches above the top of the trench. Maintain the rounded elevation free from mud or other objectionable material until the aggregate for the blanket underdrains is placed thereon.

If necessary, in order to form a stable layer or course, spray the aggregate with water during the process of spreading and rolling. Perform the spraying so the force of the water will not wash the finer material to the bottom of the lift.

When concrete pavement or soil backfill material is to be placed over the blanket underdrain, use fine aggregate (complying with **DIVISION 1100**) in the top 4 inches of the underdrain, or other approved granular aggregate provided these fine aggregates do not have more than 2% passing the No. 200 sieve (wash).

g. Pipe Underdrain Outlets. Use a concrete flume or other approved type of flume, constructed at the outlet end of pipe underdrains as shown in the Contract Documents. Use Grade 3.0 concrete to construct the outlet flume so that the flume is flush with the finished shoulder slope.

h. Underdrain Markers. Erect 1 guidepost to mark each outlet flume for pipe underdrains, at the location shown in the Contract Documents. Use either a 6 inch diameter treated wood post or a 3 pound per foot galvanized or baked on enamel metal channel post. Set guideposts according to **SECTION 827**.

(1) Wood Guideposts. Apply 2 coats of aluminum paint to the upper 18 inches of the wooden post. Apply a third coat of International orange, enamel paint to the upper 12 inches of the wooden post.

(2) Metal Guideposts. Apply 1 coat of International orange, enamel paint to the upper 12 inches of the galvanized or baked on enamel metal channel post.

822.4 MEASUREMENT AND PAYMENT

The Engineer will measure pipe underdrains by the linear foot.

When aggregate for blanket underdrains is shown in the Contract Documents by the cubic yard, the Engineer will measure the cubic yards of aggregate in the vehicle at the time and place of unloading.

When aggregate for blanket underdrains is shown in the Contract Documents by the ton, the Engineer will measure the tons of aggregate in the vehicle at the time and place of unloading. Deductions will be made for all moisture in the material when measured by the ton. Determine the moisture content according to **DIVISION 2500**.

The Engineer will measure and pay for guideposts used for underdrain markers according to **SECTION 827**, and the quantities will be included in the quantity of guideposts shown in the Contract Documents.

Payment for "Pipe Underdrains" and "Aggregate for Blanket Underdrains" at the contract unit prices is full compensation for the specified work.

SECTION 823

PREFABRICATED INTERCEPTION DEVICES AND SLOTTED DRAINS

823.1 DESCRIPTION

Install steel prefabricated interception devices and steel slotted drains at locations designated in the Contract Documents.

BID ITEMS	UNITS
Prefabricated Interception Device (*)	Each
Slotted Drain (**)	Linear Foot
*Type	
**Diameter of CMP	

823.2 MATERIALS

a. Steel Prefabricated Interception Device. Provide steel interception devices fabricated to the dimensions shown in the Contract Documents and from components that comply with these requirements:

- provide steel bars for concrete reinforcement and steel fasteners that comply with **DIVISION 1600**;
- provide corrugated metal pipe that complies with **DIVISION 1900**;
- provide steel risers fabricated from the same base metal as the corrugated metal pipe;

b. Slotted Drains. Provide steel slotted drains fabricated to the dimensions shown in the Contract Documents and from components that comply with these requirements:

- provide corrugated metal pipe that complies with **DIVISION 1900**;
- provide steel grating and bulkheads fabricated from the same base metal as the corrugated metal pipe;

c. Concrete. Provide Grade 3.0 concrete that complies with **DIVISION 400**.

823.3 CONSTRUCTION REQUIREMENTS

Install the steel prefabricated interception devices and steel slotted drains at the locations and to the grades shown in the Contract Documents according to **DIVISIONS 200** and **700**.

Repair any damage to the galvanized coating according to **DIVISION 1900**.

823.4 MEASUREMENT AND PAYMENT

The Engineer will measure each steel prefabricated interception device.

The Engineer will measure slotted drains by the linear foot.

Any required excavation, backfill or concrete pads are subsidiary to the prefabricated interception device or slotted drain.

Payment for "Prefabricated Interception Device" and "Slotted Drain" at the contract unit prices is full compensation for the specified work.

SECTION 824

CONCRETE SIDEWALK, STEPS AND RAMPS

824.1 DESCRIPTION

Construct concrete sidewalk, steps and ramps with detectable ADA warning strips according to the Contract Documents.

BID ITEMS	UNITS
Sidewalk Construction (*) (**)	Square Yard
Sidewalk Ramp	Square Yard
Grade 3.0 Concrete (Misc.)	Cubic Yard
Reinforcing Steel	Pound

*Thickness
**"AE" denotes air-entrained concrete.
No entry denotes concrete without air.

824.2 MATERIALS

Provide materials that comply with the applicable requirements.

Concrete and Mortar ..... **DIVISION 400**
ADA-Compliant Paving Bricks ..... **DIVISION 1300**
Reinforcing Steel ..... **DIVISION 1600**
Preformed Joints Type B ..... **DIVISION 1500**
Joint Sealing Compound ..... **DIVISION 1500**
Mortar sand (FA-M) ..... **DIVISION 1100**
Silicon joint sealant (Type NS) ..... **DIVISION 1500**
ADA-Compliant Prestressed Ramp Panels ..... **DIVISION 1700**

824.3 CONSTRUCTION REQUIREMENTS

a. Excavation. Excavate to the required depth and to a width that will permit the installation and bracing of the forms. Shape the foundation and compact to a firm even surface conforming to the section shown in the Contract Documents. Remove all soft and yielding material and replace with acceptable material.

b. Forms. Extend forms for the full depth of the concrete. Use straight forms, free from warp and of sufficient strength to resist the pressure of the concrete without springing. Brace and stake forms so the forms remain true to line and grade until their removal.

Slipform equipment may be approved by the Engineer and used on a satisfactory performance basis.

c. Mixing and Placing Concrete. Unless shown otherwise in the Contract Documents, construct concrete sidewalks, steps and ramps in a single course of Grade 3.0 concrete. Thoroughly moisten the foundation immediately prior to the placing of concrete. Place concrete according to **DIVISION 400**.

Finish the surface with a wooden float. Finish all outside edges of the slab and all joints with a ¼ inch radius edging tool.

d. Reinforcement. Place reinforcing steel for steps, sidewalks or ramps as shown in the Contract Documents. Support bars on metal bar chairs and securely wire to prevent displacement during concrete placement.

e. Sidewalk Ramps with ADA detectable warning strips.

(1) Paving Brick. Set the truncated dome paving bricks in a mortar bed as detailed in the Contract Documents. Construct the surface of truncated dome paving brick between the truncated domes flush with the adjacent sidewalk ramp surface. Fill the joints between the truncated dome paving bricks with broomed-in mortar sand.

The Engineer will check the completed truncated dome paving brick surfaces with a 10 foot straightedge. The completed paving brick surfaces may not deviate more than ⅜ inch, unless the contour of the area exceeds this tolerance

(2) Cast-In-Place Prestressed Panels. Prior to the concrete achieving initial set, recess areas to receive prestressed panels below finished grade at locations shown in the Contract Documents. Use a wood float or tool recommended by the manufacturer to achieve the proper depth and refinish the disturbed area. Prior to placement, pre-dampen the back side of the panel with clean water. Follow the manufacturer's recommendations for preparing the panel when mortar is specified between the panel and fresh concrete.

Install the panels immediately in recess areas of fresh concrete and lightly tap the panels to grade using a rubber mallet to establish bond and 100% surface contact. Square the edges of the panels to provide a symmetrical alignment. Set the depth flush with the adjacent surfaces. Keep the tolerances between panels and surrounding surfaces within 1/16 inch.

Maintain a 3/16 inch caulk joint between panels and seal with a Type NS silicon joint sealant.

Edge around the panels as shown in the Contract Documents. Clean any concrete residue off of the panels with a damp sponge to provide a clean appearance.

Protect the panels from concrete curing compound overspray.

(3) Hardened Concrete Placement of Prestressed Panels. Recess the area 3/16 inch more than the thickness of the prestressed panels.

Clean the surfaces of all dust, oil, grease, curing or sealing compounds, laitance or other surface contaminants. Mechanically abrade the concrete surface to provide a smooth surface profile.

Fill cracks or voids with compounds that are approved by the panel manufacturer.

Remove any high spots on the substrate by mechanical methods.

Cut a large enough opening to permit expansion joints, when applicable.

Install panels with a high-strength polymer modified concrete according to the manufacturer's installation instructions.

f. Curing. Immediately after the finishing operation, cure the sidewalk, ramps and steps according to **DIVISION 700**.

g. Contraction, Construction and Expansion Joints. Form contraction joints at intervals shown in the Contract Documents. If not shown, form by placing a metal template having a minimum thickness of ⅛ inch into the concrete a minimum of ⅓ of the depth of the concrete, or by cutting entirely through the fresh concrete with a trowel.

Construct expansion joints as shown in the Contract Documents.

Form construction joints around all appurtenances such as manholes, utility poles, etc., extending into and through the sidewalk, and install ¼ inch Type B preformed joint filler in these joints. Install expansion joint filler of the thickness shown in the Contract Documents between concrete sidewalks and any fixed structures such as a building or bridge. Extend the joint filler or expansion joint material for the full depth of the walk.

Round the edges of contraction, construction and expansion joints with a ¼ inch radius edging tool.

h. Backfilling. Backfill the area adjacent to new sidewalks, ramps or steps and satisfactorily compact with suitable material. Observe adequate precautions to prevent injury to the sidewalks, ramps or steps during the compacting operations.

Dispose of excess excavated material as shown in the Contract Documents or as directed by the Engineer.

824.4 MEASUREMENT AND PAYMENT

Excavation for the construction of sidewalks, ramps and steps will not be measured separately for payment, but will be considered subsidiary work, except when such excavation may be considered as a part of, and may be measured in conjunction with the embankment excavation. In such instances, the excavation will be included in the quantity of embankment excavation computed as a line item on the contract.

The Engineer will measure sidewalk and sidewalk ramps by the square yard of the various thickness indicated.

The Engineer will measure steps by the cubic yard of Grade 3.0 concrete (misc.).

The Engineer will measure reinforcement by the pound according to **SECTION 711**.

824 - CONCRETE SIDEWALK, STEPS AND RAMPS

Payment for "Sidewalk Construction", "Sidewalk Ramp", "Grade 3.0 Concrete (Misc.)" and "Reinforcing Steel" at the contract unit prices is full compensation for the specified work.

SECTION 825

CURB AND GUTTER

825.1 DESCRIPTION

Construct concrete curb and gutter as shown in the Contract Documents. Repair curb as designated in the Contract Documents, or as directed by the Engineer.

BID ITEMS	UNITS
Curb, Edge (*) (**)	Linear Foot
Curb, Header (**)	Linear Foot
Curb and Gutter, Combined (**)	Linear Foot
Gutters (**)	Linear Foot
Curb, Protection (*) (**)	Linear Foot
Curb, Asphaltic Concrete	Linear Foot
Gutters, Asphaltic Concrete	Linear Foot
Curb and Gutters, Asphaltic Concrete	Linear Foot
Curb Repair	Linear Foot

*Size, height or special.
**"AE" denotes air-entrained concrete.
No entry denotes concrete without air.

825.2 MATERIALS

Provide materials that comply with the applicable requirements.

Concrete ..... **DIVISION 400**
HMA ..... **DIVISION 600**
Reinforcing Steel ..... **DIVISION 1600**
Structural Steel ..... **DIVISION 1600**
Expansion Joint Filler ..... **DIVISION 1500**
Joint Sealing Compound ..... **DIVISION 1500**
Asphalt Materials ..... **DIVISION 1200**
Shot-Crete Concrete ..... **SECTION 826**

Type I or II cement may be used in curb repair concrete.

Unless shown otherwise in the Contract Documents, the aggregate to be used for asphaltic curbs, shall be of the same type as that used on the other bid items in the contract. If there are no other asphalt bid items designated in the Contract Documents, use Commercial Grade HMA Type A or B. Adjust the maximum sizes and gradation of the aggregate and the asphalt content of the mixture to produce a dense workable mix, capable of being molded, pressed through the slip form without tearing or pulling, and produce a dense section with smooth and uniform surfaces free from segregated areas and with clear-cut corners and edges.

825.3 CONSTRUCTION REQUIREMENTS

a. Subgrade. Excavate the subgrade for combined curb and gutter, gutters and protection curb as shown in the Contract Documents. If the section is not shown, excavate to the curb and gutter width plus 12 inches on each side. Compact to uniform density. Excavate rock, shale or soft and yielding material 6 inches below subgrade elevation and replace with suitable backfill material. Compact the backfill material to Type A Compaction, **SECTION 205**. Roll and compact the subgrade to provide a smooth surface.

b. Concrete.

(1) Composition, Consistency, Proportioning and Mixing. Unless shown otherwise in the Contract Documents, construct edge curb, header curb, combined curb and gutter, gutters and protection curb adjacent to

concrete pavement using the grade of concrete specified for the pavement. Place concrete according to **DIVISION 400**. When concrete curbs are shown to be adjacent to asphalt pavement construct concrete curb and gutters, use and place Class 3.0 concrete as shown in **DIVISION 400**.

(2) Forms. Use steel forms for edge curb or header curb placed monolithic with concrete pavement. Construct all other types of curb and gutter using steel forms, except, wood may be used for curb or gutter of unusual section or when small quantities are involved, as approved by the Engineer. Use and install forms that will remain true to line and grade. Clean and oil forms before each use.

Use slip form equipment on a satisfactory performance basis and approved by the Engineer.

(3) Reinforcement. Hold reinforcement in the position shown in the Contract Documents by pins, bar chairs or other approved devices.

(4) Expansion. Construct contraction and construction joints for curb and gutter as shown in the Contract Documents. Provide joints and materials of the type and complying with the dimensions shown in the Contract Documents.

Construct planes of weakness in curbs and gutters at locations shown in the Contract Documents by sawing through the curb or gutter section to a depth a minimum of 1 ¼ inches below the surface of the gutter, and to a maximum width of ⅜ inch. These joints may be constructed by inserting a removable metal template in the fresh concrete, or by other methods approved by the Engineer. Sealing of these joints is not required.

(5) Placing Concrete. Construct edge curb and header curb monolithic with concrete pavement. At locations to be covered with curb, clean all laitance and roughen immediately after finishing. Place and consolidate concrete, shape with a steel tool to the dimensions shown in the Contract Documents.

Moisten the subgrade before placing concrete for non-monolithic curbs and gutters. Consolidate the concrete with an approved internal type vibrator or by hand spudding and tamping. Shape the surface with a steel tool shaped to produce the cross section shown in the Contract Documents.

Use edgers to round the edges to the designated radii.

(6) Finish. Finish the surfaces of curbs and gutters with a wood float, unless the Contract Documents specifically require a steel trowel or rubbed finish. Light brushing may be required by the Engineer.

(7) Cure. Cure curbs and gutters that are monolithic with concrete pavement in the same manner as specified for the pavement.

Cure all other curbs, gutters and combined curb and gutters immediately after the concrete is finished and hardened sufficiently to prevent detrimental marring, according to **DIVISION 700**.

c. Asphalt. Clean all foreign material from the surface on which curbs and gutters are to be constructed. When placed on an asphalt surface, apply an asphalt tack coat as shown in the Contract Documents.

Form and compact the sections using an automatic mechanical placing machine, except in extremely short radii or through inaccessible areas. When hand placement methods are necessary, form and compact the sections with hand tools and back forms.

The maximum temperature of the asphaltic mixture at the time of placement is 335ºF. The minimum temperature shall be sufficient to allow the material to be placed and compacted, to the specified density and surface tolerance requirements.

When the air temperature is below 50ºF, or the surface temperature is below 55ºF, to obtain an adequate bond between the curb and the surface course, heat the upper portion of the surface course by methods which will not harm the mixture in the surface course.

The Engineer will suspend operations any time that adequate bonding of the section to the surface is not being accomplished. Correct any conditions causing the deficient bonding.

On gutter sections, apply a surface treatment of asphaltic cement in an amount to waterproof the section.

d. Backfilling. Backfill the area adjacent to curbs and gutters with approved material to the top edges of the curbs and gutters or to the cross-sections shown in the Contract Documents. Place and compact the backfill according to **SECTION 204**, except the compaction requirements may be waived where the backfill area falls within the shoulder area which is to be compacted. If the curb and gutter backfill falls within a shoulder or other area which is designated in the Contract Documents to be compacted, backfill the curb and gutter according to the compaction provision for the adjacent material.

e. Curb Repair. Remove old concrete as shown in the Contract Documents, or as directed by the Engineer. Take care to prevent damage to the concrete that is to remain in place. Dispose of broken concrete as approved by the Engineer.

After removing the old concrete in the curb, clean the existing reinforcing steel exposed before the concrete is replaced.

Repair any damage to the existing structure due to the negligence on the part of the Contractor at own expense.

Replace using one of the 2 methods shown below:

(1) Standard, Conventional Method. Repair concrete by standard, conventional procedures as shown in the Contract Documents.

Use Grade 3.0 concrete for repairing curbs unless shown otherwise in the Contract Documents. Apply concrete adhesive to existing surfaces prior to placing new concrete, as designated in the Contract Documents.

(2) Shot-Crete Method. Adhere to **SECTION 826**. Either the wet mix or dry mix process may be used.

825.4 MEASUREMENT AND PAYMENT

Excavation for the construction of the various types of curbs and gutters will not be measured separately for payment, but will be considered subsidiary work, except when such excavation may be considered as a part of, and may be measured in conjunction with the roadway excavation. In such instances, the excavation will be included in the quantity of roadway excavation computed as a line item on the contract according to **DIVISION 200**.

The Engineer will measure the various types of curbs and gutters, and combination curb and gutter by the linear foot along the face of the curb.

Type I and II combined curb and gutter will not be measured separately, but the Engineer will measure together as linear feet of combined curb and gutter.

The Engineer will measure gutter by the linear foot along the flowline.

The Engineer will not measure asphalt material or aggregate required to construct the work.

Payment for "Curb, Edge", "Curb, Header", "Curb and Gutter, Combined", "Gutters", "Curb, Protection", "Curb, Asphaltic Concrete", "Gutters, Asphaltic Concrete", "Curb and Gutters, Asphaltic Concrete" and "Curb Repair" at the contract unit prices is full compensation for the specified work.

SECTION 826

SHOT-CRETE CONCRETE

826.1 DESCRIPTION

Apply the concrete by pneumatically projecting the concrete at high velocity onto a surface as shown in the Contract Documents.

BID ITEM	UNITS
Shot-crete	*

* Unit of Measurement shown in the Contract Documents

826.2 MATERIALS

a. Materials for Shot-Crete Concrete. Provide aggregate for concrete that complies with FA-A, **DIVISION 1100**. The Engineer will allow modification of the grading requirements for FA-A, if the modification improves the product.

Provide either Type I or Type II portland cement. The Engineer will accept any recognized brand of cement that is free of lumps and warehouse pack based on visual inspection.

Provide materials for curing the shot-crete concrete that comply with **DIVISION 1400**.

Provide water that complies with **DIVISION 2400**.

b. Proportioning for Shot-Crete Concrete. Combine (by weight) the cement and aggregate within the range of 1 part cement to 3 - 4½ parts aggregate.

Regulate the water in the mixture to achieve maximum adhesion and minimum rebound and slumping.

The Engineer may adjust the proportions, if necessary, to obtain the most appropriate mixture for the work.

826.3 CONSTRUCTION REQUIREMENTS

Apply the shot-crete concrete to the surfaces designated in the Contract Documents. Reduce the layer thickness of the shot-crete if the applied material sags.

Do not work rebound aggregate back into the applied concrete. Remove and dispose of all rebound aggregate. Do not salvage and reuse rebound aggregate.

Cure the shot-creted area by keeping the surface of the area continuously damp for a minimum of 4 days. If the 4 day damp cure is impracticable, apply Type 2 liquid membrane-forming compound as the curing medium.

826.4 MEASUREMENT AND PAYMENT

The Engineer will measure the shot-crete concrete by the units shown in the Contract Documents when shown as a bid item to the contract.

Payment for the "Shot-crete" at the contract unit price is full compensation for the specified work.

SECTION 827

GUARDRAIL AND GUIDEPOSTS

827.1 DESCRIPTION

Construct the designated type of guardrail and guidepost as shown in the Contract Documents.

BID ITEMS	UNITS
Guardrail, Steel Plate	Linear Foot
Guardrail, Cable	Linear Foot
Guardrail, Removal of Steel Plate	Linear Foot
Guardrail, Removal of Cable	Linear Foot
Guardrail, Removal of Timber	Linear Foot
Guardrail, Reconstruction of Steel Plate	Linear Foot
Guardrail, Reconstruction of Cable	Linear Foot
Guardrail, Removal and Reconstruction of Steel Plate	Linear Foot
Guardrail, Removal and Reconstruction of Cable	Linear Foot
Guideposts	Each
Guideposts, Removal of	Each
Guideposts, Resetting of	Each
Guideposts, Removal and Resetting of	Each
Guardrail Posts	Each
Guardrail End Terminal (*)	Each
*Type	

827.2 MATERIALS

Provide materials that comply with the applicable requirements.

Posts ..... **DIVISION 2300**
Preservative Treatment for Timber ..... **DIVISION 2300**
Wire Cable and Fittings ..... **DIVISION 1600**
Metal for Guardrail and Fittings ..... **DIVISION 1600**
Paint ..... **DIVISION 1800**

827.3 CONSTRUCTION REQUIREMENTS

a. General. When steel plate guardrail is shown in the Contract Documents, any one of the types of steel plate guardrail shown may be provided, but only one type may be used on a project.

b. Erection of Guardrail and Guideposts. Excavate holes for guardrail posts and guideposts to the required depth. Excavate holes to permit compaction of the backfill around the posts.

Guardrail posts and guideposts may be set by driving. Use post caps that are designed to protect the post from detrimental crushing during the driving operations. If damaged or an unacceptable line and grade is obtained, excavate for the erection of the posts.

Set posts plumb, firm and to lines and grades shown in the Contract Documents. Place backfill around the posts in thin layers and thoroughly compact. For the top of the backfill, use the same material of at least the same thickness as that used in construction of the shoulders at that point.

Place and fasten guardrail cables, plates, shapes and fittings as shown in the Contract Documents.

When guardrail is removed and reused on the project, thoroughly clean guardrail prior to erection. Punch or drill the guardrail to accommodate the revised post spacing as shown in the Contract Documents. When guardrail is required to be cut, make the cut by sawing. Treat all such holes and cuts with zinc dust paint.

Install guardrail end terminals according to the manufacturer's requirements and the Contract Documents.

c. Removal of Guardrail or Guideposts. Carefully disassemble guardrail. Prevent undue injury to the rail, fittings and posts. Remove guardrail posts and guideposts without damage and store according to **subsection 827.3f.** at locations approved by the Engineer. The material will remain the property of the owner.

d. Reconstruction of Guardrail and Resetting of Guideposts. Guardrail and accessories to be reconstructed or guideposts to be reset will be provided by the owners from the project or a storage site as shown in the Contract Documents. Reconstruct the guardrail and reset the guideposts according to the requirements above for new guardrail and guideposts.

e. Removal and Reconstruction of Guardrail and Removal and Resetting of Guideposts. Comply with **subsections 827.3 c.** and **d.** except that the Contractor is responsible for all materials and will replace at own expense any missing materials from the removal, material lost or damaged during the removal, storage or reconstruction.

f. Storing Galvanized Guardrail. Store all galvanized rail elements, end sections and accessories to prevent galvanic action. Do not store in direct contact with the soil. The material may be stored in the open, provided it is properly separated, stacked and drained.

Protect galvanized surfaces which have been abraded exposing the base metal, threaded portions of all fittings and fasteners and cut ends of bolts from moisture, soil or other damaging elements.

The Contractor is responsible for the condition of the material in storage.

827.4 MEASUREMENT AND PAYMENT

The Engineer will measure construction, removal, reconstruction or removal and reconstruction of guardrail by the linear foot. Each separate run of rail will be measured from center of end post to center of end post along the rail or may be determined by recording the number of standard length panels installed.

The Engineer will measure each guidepost to be set, removed, reset or removed and reset.

The Engineer will measure each guardrail post provided and set.

The Engineer will measure each guardrail end terminal, including accessories, posts and hardware as a complete system.

The Engineer will not measure excavation and backfill for separate payment. These items are subsidiary to other items in the Contract Documents.

Any required treatment shown in the Contract Documents for wood members is subsidiary to the item of reconstruction of steel plate guardrail.

Payment for "Guardrail, Steel Plate", "Guardrail, Cable", "Guardrail, Removal of Steel Plate", "Guardrail, Removal of Cable", "Guardrail, Removal of Timber", "Guardrail, Reconstruction of Steel Plate", "Guardrail, Reconstruction of Cable", "Guardrail, Removal and Reconstruction of Steel Plate", "Guardrail, Removal and Reconstruction of Cable", "Guideposts", "Guideposts, Removal of", "Guideposts, Resetting of", "Guideposts, Removal and Resetting of", "Guardrail Posts", and "Guardrail End Terminal" at the contract unit prices is full compensation for the specified work.

SECTION 828

FENCING

828.1 DESCRIPTION

Construct the designated type of fence and gates as shown in the Contract Documents.

BID ITEMS	UNITS
Fence (*) (**)	Linear Foot
Fence (*) (Temporary)	Linear Foot
Fence (*) (Removal and Resetting)	Linear Foot
Fence (Removal of Existing)	Linear Foot
Gate (*) (**)	Each
Posts (Corner) (*)	Each
Posts (End) (*)	Each
Posts (Pull) (*)	Each
Floodgates	Each

*Barbed Wire, Chain Link, Single Wire Cable (Type I, Type II or Type I or II) Woven Wire (Type A, Type B or Type A or B). Temporary fence may be Barbed Wire, Chain Link, Single Wire Cable, Woven Wire or the type shown on the Plans.

** Size, when necessary.

828.2 MATERIALS

Provide materials that comply with the applicable requirements.

Woven Wire Fence Fabric ..... **DIVISION 1600**
Chain Link Fence Fabric ..... **DIVISION 1600**
Barbed Wire ..... **DIVISION 1600**
Steel Posts and Braces ..... **DIVISION 1600**
Wood Posts ..... **DIVISION 2300**
Preservative Treatment for Timber ..... **DIVISION 2300**
Gates ..... **DIVISION 1600**
Tension Wire ..... **DIVISION 1600**
Fittings ..... **DIVISION 1600**
Wire Cable and Fittings for Highway Fence ..... **DIVISION 1600**
Floodgates ..... **DIVISION 1600**
Concrete and Grout ..... **DIVISION 400**

When designated in the Contract Documents, use metal "T" section commercial grade posts for barbed wire fence weighing a minimum of 1 ⅓ pounds per foot after galvanizing.

Use material for temporary fence meeting recognized industry standards. Temporary fence material may have been previously used. The Engineer will approve the temporary fencing materials on the basis of condition and compliance with dimensional requirements.

828.3 CONSTRUCTION REQUIREMENTS

a. General. Confine activities and operations to the area immediately adjacent to the right-of-way lines and within the highway right-of-way or as shown in the Contract Documents. The Contractor is responsible for satisfactory arrangements for permits, as required, from adjacent property owners.

When the Contractor's operations create the need for temporary fencing, provide and install temporary fencing and appurtenances until such time that the permanent fence is in place (or until the temporary fence is no longer required). At the discretion of the Engineer, temporary fencing may be erected without concrete footings, pull posts, corner posts, etc. Remove the temporary fencing and appurtenances from the project site, when directed by the Engineer. Temporary fencing materials will remain the property of the Contractor.

(1) Clearing. When necessary, clear the path of the fence line.

(2) Trench Excavation. When necessary, excavate a trench to line and grade in areas of irregular ground to secure clearance between the ground line and the bottom of the fence fabric, or to permit placing steel fence wire below the bottom of the fence fabric at stream crossings. In areas where rock is encountered, excavate the rock as necessary to the required line and grade. Backfill any excavation of rock below the required grade with suitable materials as directed by the Engineer. Construct trenches to provide proper drainage. In general, the bottom of the fence will follow the contour of the ground according to standard industry practice in constructing fence of the types specified.

b. Concrete Footings. When required, construct footings of commercial grade concrete according to the Contract Documents.

Volumetric proportioning and hand mixing of concrete is permitted for concrete footings where small quantities are required.

Extend the top of the footing slightly above the ground line and steel trowel to a smooth finish with a slope to drain away from the post. Center posts, braces and other units in their footings. Set the posts and braces in advance of placing the fence to allow the concrete time to obtain its strength.

c. Posts Set in Rock. Where rock occurs within the required depth to which fence posts are to be erected, drill a hole of a diameter slightly larger than the largest dimension of the post in the rock and grout in the posts. When shown in the Contract Documents, cast in place the concrete footing as specified in **subsection 828.3b.**, between the top of rock and the required grade. At line posts, where top of rock is 8 inches or less below the required grade, remove the anchor plate. At all line posts, backfill the excavation above the top of rock with excavation materials placed in 4 to 6 inch layers. Thoroughly tamp each layer in place.

d. Structure Terminals. Place structure terminal assemblies at all stock passes, crossroad underpasses or overpasses and major drainage structures as shown in the Contract Documents.

e. Floodgates and Channel Crossings. Construct floodgates and channel crossings as shown in the Contract Documents.

f. Intermediate or Line Posts. Erect each post plumb, and horizontally line up all posts between horizontal angle points with no perceptible variation. Erect with line post spacing as uniform as practicable under local conditions, with maximum spacing as shown in the Contract Documents and a tolerance of minus 2 feet.

g. Pull Posts. Construct pull post assemblies (to the approximate spacing shown) in straight runs and at each vertical angle point as described in the Contract Documents.

h. Corner Posts. Place corner post assemblies at all horizontal angle points, and erect to comply with the measurement shown in the Contract Documents.

i. End Posts. Construct end post assemblies in the line of the fence at all terminal points. When gates and flood gates are required, use end posts to attach the gate or flood gate.

j. Identification Signs. Provide and place identification signs as shown in the Contract Documents.

k. Erection of Gates. Provide all materials necessary to complete the installation of pedestrian and vehicular gates as shown in the Contract Documents.

Carefully align all gates with posts vertical. Tightly assemble clamps used for attaching hardware. Construct the bottom of each gate 3 to 5 inches above the ground when closed, and to clear the ground by a minimum of 3 inches at all points in its swing. Modify the existing grade within the area of swing to meet this requirement, as directed by the Engineer. Direction of swing of gates will be shown in the Contract Documents. Install all gate stops as shown in the Contract Documents. For all gates, provide stops with latches, or other approved means for holding gates open, and place to prevent damage to the gate or fence by over-swing. Provide stops to arrest the swing of a closed gate at the centerline of the fence.

l. Removal of Existing Fence. Remove the existing fence and store at locations as directed by the Engineer. Reset existing fence to be removed and reset, as shown in the Contract Documents.

Provide all new materials necessary for resetting fence.

m. Erection of Woven Fence. Unless shown otherwise in the Contract Documents, either type of woven wire fence shown may be provided, but only one type may be used on a project.

Place the bottom of the fabric of woven wire fence a nominal distance of 3 inches above the ground line. However, over irregular ground, a clearance of 1 to 6 inches for a distance less than 8 feet is permitted. Perform any necessary excavation and backfilling required to comply as specified in **subsection 828.3a.(2)**.

Set all metal end, corner, pull and brace posts and all braces in concrete footings as shown in the Contract Documents. The dimensions of the footings may be varied as permitted by the Engineer, but shall provide an equal volume of concrete. Except where rock is encountered, set or drive intermediate or line posts into the ground. Provide metal posts with an approved plate or other anchor device to hold the post plumb and in proper alignment. The plate or anchor shall be satisfactorily welded or riveted (not less than 2 rivets) to the post. Wood posts may be driven or set in pre-bored holds. Remove any posts damaged by driving.

After posts are permanently positioned and concrete footings are fully set, place fabric by securing or fastening one end and applying sufficient tension to remove all slack before making permanent attachments. Fasten the lateral wires to end, corner and pull posts by wrapping the wires around the posts and tying the wire back on itself with a minimum of 5 twists wrapped tightly. Perform tying by using tools designed for the purpose according to the fence manufacturer's recommendation.

Apply the tension for stretching the fence by use of mechanical fence stretchers and with single wire stretchers, according to the fence manufacturer's recommendations. Securely make all splices in the fabric according to the fence manufacturer's recommendations, and using tools designed for that purpose.

Fasten fence fabric to steel intermediate or line posts with ties or clamps, and to wood posts with staples at the bottom and top 2 wires and other alternate intermediate lateral wires. Where the design of the line post incorporates satisfactory provision for supporting and securing the fabric wire to the post, the Engineer may eliminate tie wires or clamps.

n. Erection of Chain Link Fence. Set the posts sufficiently in advance of the placing of the fabric to allow the concrete time to obtain its design strength. Set the bottom of the fabric 3 inches above the finished ground line. Fasten the fabric to the tension wires as shown in the Contract Documents.

(1) Post Spacing and Setting. Set posts with a maximum spacing of 10 feet and set a minimum of 2 ½ feet below the finished surface of the ground in concrete footings as shown in the Contract Documents. Construct the concrete footings of a size and shape shown in the Contract Documents.

(2) Fabric bands with fasteners. Fasten fabric to line posts with aluminum or galvanized fabric bands spaced approximately 14 inches apart. Securely fasten the fabric to the end posts by approved type metal fasteners.

o. Erection of Barbed Wire Fence. Erect the fence as shown in the Contract Documents.

For intermediate or line posts, use either wood or metal posts of the type shown in the Contract Documents, but only one type may be used on the project,

Excavate holes for wooden posts on line and to the depth shown in the Contract Documents, and of sufficient size to permit adequate compaction of the backfill around the post.

Set corner posts and support posts, and securely brace and wire before setting the intermediate posts. Space the intermediate posts equal distances apart, 13 ½ feet maximum. Set the posts plumb, firm and true to designated line and grade. If not set in concrete, place the backfill around the posts in thin layers and thoroughly compact.

If metal posts are used for the intermediate posts, drive with an approved mechanical device to the depth shown in the Contract Documents.

Use brace wire consisting of 2 complete loops of No. 9 smooth, galvanized wire. Twist the loops both above and below the brace post until tight.

Draw barbed wire taut with an approved mechanical device and securely fasten to each post with a minimum of 1 fence staple or approved wire clip. Loop the wire around the end and corner posts, and fasten with sufficient staples to anchor the wire securely.

p. Erection of Single Wire Cable Fence. Construct single wire cable fence as shown in the Contract Documents. Set all required posts as shown in the Contract Documents by driving or drilling and backfilling. Use either metal or wood posts, but only one type may be used on the project

q. Electrical Grounds. Immediately below where a power line crosses a fence, ground the fence with a galvanized or copper coated rod, 8 feet long and a minimum of ⅝ inch in diameter, driven vertically until the top is approximately 6 inches below the top of ground. Braze or attach a No. 6 solid copper conductor with an approved clamp to the rod and to the fence so each element of the fence is grounded. Install the ground rod immediately below the point of crossing.

828.4 MEASUREMENT AND PAYMENT

The Engineer will measure various sections of fence, fence to be removed and fence to be removed and reset by the linear foot from center to center of terminal posts, excluding gate length.

The Engineer will measure single wire cable fence by the linear foot, except no measurement will be made for corner posts and end posts for this type of fence.

The Engineer will measure each Post (Corner), Post (Pull) and Post (End). Gate and floodgate posts required will be measured as Post (End).

The Engineer will measure temporary fencing including appurtenances by the linear foot when shown in the Contract Documents or directed by the Engineer. The Engineer will not measure temporary fencing and appurtenances necessitated by the Contractor's operations.

The Engineer will not measure clearing, excavation, backfill, drilling of rock, electrical grounds, structure terminals, channel crossing and line posts for payment. These items are subsidiary to the various fencing items in the Contract Documents.

Payment for various types of "Fence", "Fence (Temporary)", "Fence (Removal and Resetting)", "Fence (Removal of Existing)", "Gates", "Posts (Corner)", "Posts (End)", "Posts (Pull)", and "Floodgates" at the contract unit prices is full compensation for the specified work.

Quantities shown in the Contract Documents for temporary fencing are for estimating purposes only. No adjustment in the contract unit price will be made regardless of the amount of underruns or overruns.

SECTION 829

RIPRAP

829.1 DESCRIPTION

Construct the designated type of riprap as shown in the Contract Documents.

BID ITEM	UNITS
Riprap (*) (**)	Square Yard

*Type: light stone, grouted light stone, heavy stone, grouted heavy stone, or reinforced concrete
**Thickness of reinforced concrete riprap

829.2 MATERIALS

Provide materials that comply with the applicable requirements.

Concrete and Grout	**DIVISION 400**
Stone	**DIVISION 1100**
Type 2 Liquid Membrane-Forming Compound	**DIVISION 1400**
Type B Preformed Expansion Joint Filler	**DIVISION 1500**
Reinforcing Steel	**DIVISION 1600**
Welded Steel Wire Fabric	**DIVISION 1600**

829.3 CONSTRUCTION REQUIREMENTS

a. General. Grade the locations where the riprap is to be placed as shown in the Contract Documents. Prepare for the riprap by undercutting to the depth required for the riprap. After the riprap is completed, backfill and compact around the structure.

b. Reinforced Concrete Riprap. After the steel reinforcement is in place, place the concrete starting at the lower end and progressing to the upper end of the riprap. Use Grade 3.0 concrete, unless shown otherwise in the Contract Documents.

Finish the concrete surface with a wooden float, followed by a light brooming. Do not walk on the concrete surface during placement.

Apply Type 2 liquid membrane-forming compound as the curing medium, immediately after the concrete surface is finished, and before the set takes place. Maintain the cure for 7 days. In cold weather, maintain the concrete temperature above 32°F for the first 4 days of the 7 day cure period.

c. Stone Riprap and Grouted Stone Riprap. Place the riprap stones on edge with the bedding plane at right angles to the slope. Place the stones with ends and sides abutting, as much as the size and shape of the stones will allow. Fill the larger spaces between stones with spalls. The finished riprap shall have an even and uniform surface that complies with the Contract Documents.

When designated in the Contract Documents, fill the spaces between the stones with concrete grout. Brush the grout into the spaces until all voids are filled.

Cure the concrete grout according to the requirements for reinforced concrete riprap **subsection 829.3b**.

829.4 MEASUREMENT AND PAYMENT

The Engineer will measure reinforced concrete riprap, stone riprap and grouted stone riprap by the square yard, measured along the finished surfaces.

Payment for "Riprap" at the contract unit price is full compensation for the specified work.

SECTION 830

SLOPE PROTECTION

830.1 DESCRIPTION

Construct slope protection on bridge berms, fill slopes and channel banks as shown in the Contract Documents.

BID ITEMS	UNITS
Bedding for Slope Protection	Cubic Yard
Slope Protection (*) (**) (***)	Cubic Yard
Geotextile Fabric	Square Yard

*Type: aggregate, shot rock or riprap stone
**Thickness
***Grouted, when specified

830.2 MATERIALS

Provide materials that comply with the applicable requirements.

Grout ..... **DIVISION 400**
Aggregate that complies with Stone for Aggregate Ditch Lining ..... **DIVISION 1100**
Stone ..... **DIVISION 1100**
Bedding that complies with Type III Stone for Filter Course ..... **DIVISION 1100**
Type 2 Liquid Membrane-Forming Compound ..... **DIVISION 1400**
Geotextile Fabric ..... **DIVISION 1700**

Unless prohibited in the Contract Documents, and when approved by the Engineer, the Contractor may use concrete rubble entirely or in combination with the material designated in the Contract Documents. If concrete rubble is substituted for the aggregate or stone designated in the Contract Documents, the Engineer will waive the quality requirements, and will determine compliance with the gradation requirements by visual inspection. Provide concrete rubble that is broken concrete from existing structures. Remove asphalt overlays and patches on the deck of the structure before the concrete is rubblized. Cut off and remove all protruding reinforcing steel in the concrete rubble.

The maximum dimension of the slope protection or concrete rubble in any direction shall not exceed the thickness shown in the Contract Documents. Large flat pieces of concrete rubble are prohibited.

830.3 CONSTRUCTION REQUIREMENTS

Construct the bridge berms, fill slopes and channels to the lines and grades shown in the Contract Documents. Prepare for the slope protection by undercutting the finished berms, slopes and channels to the depth necessary for the slope protection. After the slope protection is completed, backfill and compact around the structure.

Construct the slope protection to the lines and grades shown in the Contract Documents. A tolerance of +6 inches from the slope lines and grades is allowed.

Underlay the slope protection with geotextile fabric at the locations designated in the Contract Documents. Provide the Engineer with a copy of the manufacturer's recommendation. Install and secure the geotextile fabric as recommended by the manufacturer.

Replace any geotextile fabric damaged or displaced during construction.

Place the bedding for the slope protection at the locations designated in the Contract Documents. Place the bedding in its full course thickness in one operation, using methods of placement that will not segregate the material. The finished surface of the bedding shall be uniform. Compaction of the bedding is not required.

Place the slope protection the full course thickness in one operation. Do not use methods of placing the rocks that will segregate the various sizes of rocks. Do not use heavy equipment (working upon the slope protection) to the spread the rocks. Do not place oversized rocks on the slopes. Place the slope protection to produce a reasonably well-graded mass of rocks with a minimum amount of voids. The finished slope protection

shall be free of pockets of small rocks and clusters of larger rocks. Rearrange individual rocks (by hand or mechanical equipment) to the extent necessary to obtain a reasonably well-graded distribution of rock sizes.

When designated in the Contract Documents, pour concrete grout over the slope protection to fill all the voids. Apply Type 2 liquid membrane-forming compound as the curing medium. Apply the curing medium immediately after the concrete surface is finished, and before the set takes place. Maintain the cure for 7 days. In cold weather, maintain the concrete temperature above 32°F for the first 4 days of the 7 day cure period

830.4 MEASUREMENT AND PAYMENT

The Engineer will measure the bedding for slope protection and slope protection by the cubic yard. The Engineer will measure the geotextile fabric by the square yard to the limits of the bedding for slope protection.

Payment for "Bedding for Slope Protection", "Slope Protection" and "Geotextile Fabric" at the contract unit prices is full compensation for the specified work.

SECTION 831

DITCH LINING

831.1 DESCRIPTION

Construct the designated types of ditch lining as shown in the Contract Documents.

BID ITEMS	UNITS
Aggregate Ditch Lining (*)	Ton
Aggregate Backslope Ditch Lining	Ton
Concrete Ditch Lining	Square Yard
Concrete Backslope Ditch Lining	Square Yard
*Size	

831.2 MATERIALS

Provide materials that comply with the applicable requirements.

Concrete and Grout ..... **DIVISION 400**
Stone ..... **DIVISION 1100**
Type 2 Liquid Membrane-Forming Compound ..... **DIVISION 1400**
Welded Steel Wire Fabric ..... **DIVISION 1600**
Fibrous Concrete Reinforcement ..... **DIVISION 1700**

831.3 CONSTRUCTION REQUIREMENTS

a. General. Construct the ditch to the lines and grades shown in the Contract Documents before placing the ditch lining. Prepare for the ditch lining by undercutting the finished ditch to the depth required for the ditch lining. When required, compact the excavated area. The subgrade shall be well compacted prior to placing ditch lining. After the ditch lining is completed, backfill and compact around the structures.

b. Aggregate Ditch Lining and Aggregate Backslope Ditch Lining. Construct the aggregate ditch lining and aggregate backslope ditch lining according to the Contract Documents.

c. Concrete Ditch Lining and Concrete Backslope Ditch Lining. Construct the concrete ditch lining and concrete backslope ditch lining according to the Contract Documents. After the steel reinforcement is in place, place the concrete starting at the lower end and progressing to the upper end of the ditch lining.

Use Grade 3.0(AE) concrete, unless shown otherwise in the Contract Documents.

Fibrous concrete reinforcement may be used in lieu of steel mesh, unless specified otherwise in the Contract Documents. If fibrous concrete reinforcement is used, comply with these requirements:

- Use the fibers at the rate specified by the manufacturer. Add the fibers to the concrete mixture at the same time the individual concrete components are added and before the mixing revolutions are started at the concrete batch plant.
- Have a technical representative of the fiber manufacturer present at the concrete batch plant to obtain proper proportioning and mixing of the product. The Engineer will waive this requirement if the Contractor can provide evidence of previously satisfactorily using the product.

Finish the concrete surface with a wooden float, followed by a light brooming. Do not walk on the concrete surface during placement.

Apply Type 2 liquid membrane-forming compound as the curing medium. Apply the curing medium immediately after the concrete surface is finished, and before the set takes place. Maintain the cure for 7 days. In cold weather, maintain the concrete temperature above 32°F for the first 4 days of the 7 day cure.

831.4 MEASUREMENT AND PAYMENT

The Engineer will measure aggregate ditch lining and aggregate backslope ditch lining by the ton.

The Engineer will measure concrete ditch lining by the square yard, measured along the finished surfaces.

Payment for "Aggregate Ditch Lining", "Aggregate Backslope Ditch Lining", "Concrete Ditch Lining" and "Concrete Backslope Ditch Lining" at the contract unit prices is full compensation for the specified work.

SECTION 832

GABIONS

832.1 DESCRIPTION

Construct gabions according to the details shown in the Contract Documents.

BID ITEM	UNITS
Gabions	Cubic Yard/Square Yard

832.2 MATERIALS

To fill the gabions, provide stone for riprap (of the size shown in the Contract Documents) that complies with **DIVISION 1100**.

Provide gabions that comply with **DIVISION 1700**.

832.3 CONSTRUCTION REQUIREMENTS

Provide the Engineer with a copy of the manufacturer's instructions for installation of gabion. Before erecting the gabion baskets, grade the subgrade to the lines and grades (±1 inch) shown in the Contract Documents.

Assemble the gabion baskets according to the manufacturer's instructions. Do not damage the wire coatings on the baskets during assembly, structure erection, cell filling or backfill. Repair damaged wire coating as recommended by the manufacturer.

Erect the gabion baskets on the prepared subgrade, and interconnect the adjacent baskets according to the manufacturer's instructions. Stagger the vertical joints between baskets of adjacent rows and layers by a minimum of ½ the cell length. Anchor gabion baskets as recommended by the manufacturer.

Remove all kinks and folds in the wire mesh, and align the baskets before filling the cells with stones. Carefully place the stones in baskets to prevent bulging of the baskets, and to minimize voids between the stones. Place internal connecting wires (as recommended by the manufacturer) concurrently with the placement of the stones. Fill the baskets and secure the basket lids as recommended by the manufacturer. Make all exposed basket surfaces smooth and neat with no sharp stone edges projecting through the wire mesh.

Backfill the structure according to **SECTION 204**.

832.4 MEASUREMENT AND PAYMENT

When units are shown in the Contract Documents as cubic yard, the Engineer will measure the quantity of stone used to fill the gabions by the cubic yard.

When units are shown in the Contract Documents as square yard, the Engineer will measure the gabion by the square yard.

Payment for "Gabions" at the contract unit price is full compensation for the specified work.

SECTION 833

PAVEMENT PATCHING

833.1 DESCRIPTION

Patch the existing pavement as shown in the Contract Documents or at locations directed by the Engineer.

BID ITEMS	UNITS
Asphalt Pavement Patching	Ton
PCCP Patching (*) (**)	Square Yard
PCCP Edge Joint Patching (***)	Square Yard
PCCP Joint Patching (Full Depth)	Square Yard
PCCP Joint and Crack Patching (***)	Square Yard
Extra Work Saw Cuts (Set Price)	Linear Foot

*Thickness
**Sound or Unsound
***Partial Depth or Full Depth

833.2 MATERIALS

Provide materials that comply with the applicable requirements.

HMA-Commercial Grade ..... **SECTION 611**
Emulsified Asphalt (SS-1H and CSS-1H) ..... **DIVISION 1200**
Concrete (AE) (See **TABLE 833-1)** ..... **DIVISION 400**
Concrete Curing Materials ..... **DIVISION 1400**
Hot Type Joint Sealing Compound ..... **DIVISION 1500**
Reinforcing Steel ..... **DIVISION 1600**

TABLE 833-1: ADDITIONAL REQUIREMENTS FOR PAVEMENT PATCHING AIR-ENTRAINED CONCRETE

Component	Requirement
Aggregate:	Use any concrete pavement aggregate that complies with **subsection 1102**. Crushed limestone or dolomite for use in unsound pavement patching need not comply with the requirements for durable Class I or Class II aggregates.
Cement:	• For concrete with a minimum cure of 24 hours, use a minimum of 750 lbs./cu. yd. of either Type I or Type II cement that complies with **DIVISION 2000**. • For concrete with an accelerated cure*, use a minimum of 658 lbs./cu. yd. of Type III cement that complies with **DIVISION 2000**.
Calcium Chloride:	For concrete with an accelerated cure*, use Grade 2 calcium chloride that complies with **DIVISION 1700**. Add the calcium chloride by solution (the solution is considered part of the mixing water). • For a minimum cure of 4 hours at 60°F or above, use 2% (by dry weight of cement) calcium chloride. • For a minimum cure of 6 hours at 60°F or above, use 1% (by dry weight of cement) calcium chloride.
Slump:	The maximum slump at the time of placement is 2½ inches.

*For concrete with an accelerated cure, the Contractor has the option to use a rapid-set concrete patching material that complies with **DIVISION 1700**.

Provide either a cementitious grout or an epoxy-resin-base bonding system (Type IV, Grade 3, Class B/C) to grout new reinforcing steel into existing concrete pavement. Provide material that complies with **DIVISION 1700**.

Provide concrete grout that complies with **DIVISION 400**. The Engineer will accept the grout based on visual inspection for compliance with specified requirements.

833.3 CONSTRUCTION REQUIREMENTS

a. General. Prepare the areas for patching according to the Contract Documents. Unless otherwise provided in the Contract Documents, restrict the pavement patching operations to 1 traffic lane at all times.

Schedule the patching operations so that the areas prepared for patching are patched the same day the deteriorated pavement is removed. If unavoidable delays prevent patching the same day, fill the excavated areas with a compacted (temporary) asphalt mixture before nightfall.

If shown in the Contract Documents, delineate the limits of the patch by sawing the existing pavement to the depth indicated before removing the deteriorated pavement. Use a saw that will produce a smooth cut for the required depth. Coordinate the pavement sawing and patching operations so that the sawed areas are patched within 3 working days.

Prepare the areas for patching by removing the deteriorated pavement to the limits designated in the Contract Documents. If the removal of the deteriorated pavement to the designated limits reveals further deterioration in the existing pavement, extend the limits of the patch to include the exposed deficient pavement, as directed by the Engineer.

When removing the deteriorated pavement, do not damage the remaining pavement. Do not disturb the subgrade while preparing the areas for patching, except to accommodate the thickness of pavement patching shown in the Contract Documents. Adjust and re-compact the subgrade to the required lines and grades.

Remove all waste materials the same day they are excavated.

b. Asphalt Pavement Patching. After the deteriorated pavement is removed, clean the exposed edges of the existing pavement. Before placing the HMA patch, apply a thin tack coat of emulsified asphalt to the clean edges of the existing pavement.

Place the HMA in uniform layers of 3 inches or less in thickness. Compact each layer until no further consolidation is observed. Clean the surface of the preceding layer of compacted HMA before the succeeding layer of asphalt material is placed.

c. Concrete Pavement Patching. Reference the location of the existing joints in the concrete pavement before removing the deteriorated pavement. During the patching operations, establish new joints at the same locations as the original joints.

(1) Full Depth Patches. Saw the limits of full depth patches the full depth of the existing concrete pavement. If the existing concrete pavement will receive an overlay the same construction season, a rock saw is allowed for the sawing.

Make full depth patches the full lane width wide and a minimum of 6 feet longitudinally.

(2) Partial Depth Patches. The minimum patch size for partial depth patches is 4 inches by 10 inches. Delineate the limits of partial depth patches a minimum of 2 inches beyond the area of deteriorated pavement. If areas defined for partial depth patches are less than 12 inches apart, include the areas into a single patch.

Saw the limits of partial depth patches to a depth of 2 inches.

Use jackhammers (15 pounds maximum size) to remove the deteriorated pavement to the depth shown in the Contract Documents. Cut out or chip away the connecting edges below the sawed portion to as near true lines with vertical faces as possible. The Engineer may approve self-propelled milling machines on a performance basis.

After the deteriorated pavement is removed to the saw or mill depth, use a steel-faced hammer or steel chain drag to check for unsound concrete below this depth. If unsound concrete is detected, use jackhammers (15 pounds maximum size) to remove the deteriorated pavement below the saw or mill depth.

If the unsound concrete encountered is more than 4 inches deep and constitutes more than 50% of the surface area of the patch, the Engineer will determine if the patch should be a full depth patch.

If the pavement patch is started according to the details for Joint and Crack Patching (Partial Depth) and the Engineer changes the patch to a full depth patch, construct the full depth patch according to the details for Full Joint and Crack Patching. See Concrete Pavement Joint and Crack Patching standard details.

If the pavement patch is started according to the details for Edge Joint Patching (Partial Depth) and the Engineer changes the patch to a full depth patch, construct the full depth patch according to the details for Full Edge Joint Patching. See Concrete Pavement Edge Joint standard details.

Clean the partial depth patches using compressed air or a stiff rotary broom. Sandblast the cavities of the partial depth patches to expose aggregate and mortar.

Before concrete is placed in the partial depth patch, apply concrete mortar to the prepared surfaces of the patch. If the mortar dries before the concrete is placed, remove the dried mortar by sandblasting and re-apply fresh mortar.

(3) All Patches. If required, drill holes and grout the specified steel reinforcement into the existing concrete pavement according to **SECTION 842**.

Place and consolidate the specified concrete in the areas prepared for patching, strike-off the concrete flush with surface of the existing pavement, and finish the surface with a wooden float or another method approved by the Engineer.

Either form (using joint forming backer board) or saw transverse and longitudinal joints a minimum of ¼ inch wide and ⅝ inch deep. After removing the backer board from formed joints or flushing sawed joints with water, sand blast the vertical faces of the joint. Clean the sand blasted joints with compressed air and seal the joints according to the Contract Documents.

Do not place concrete patches if the ambient air temperature is below 40ºF. If the ambient air temperature is below 60°F when the concrete patches are placed, the Engineer may require additional curing time. If the ambient air temperature is above 90ºF when the concrete patch is placed, apply the curing materials before the undue loss of moisture occurs.

Unless directed otherwise by the Engineer, cure the concrete patches by applying liquid membrane-forming compound at the rate of 1 gallon per 150 square feet to the finished patch. If the existing concrete pavement will be overlayed with HMA in the near future, the Engineer may require that concrete patches are cured with emulsified asphalt.

833.4 MEASUREMENT AND PAYMENT

The Engineer will measure asphalt pavement patching by the ton of HMA used.

The Engineer will measure the various types of concrete pavement patching by the square yard.

Removal of the existing pavement for either asphalt or concrete pavement will not be measured for separate payment.

If the Contractor chooses to use a milling machine to remove the deteriorated pavement, and the area removed is greater than the area originally defined for the partial depth patch, the Engineer will base the measurements of the partial depth patch on the dimensions originally defined for the patch.

The Engineer will measure a patch started as partial depth patch, but completed as a full depth patch, as a full depth patch.

A patch started according to the details for Joint and Crack Patching (Partial Depth) and completed as a full depth patch is measured and paid as Joint and Crack Patching (Full Depth).

A patch started according to the details for Edge Joint Patching (Partial Depth) and completed as a full depth patch is measured and paid as Joint and Crack Patching (Full Depth).

Patches started according to Partial Depth, but completed as Full Depth due to Contractor's negligence will be measured as Partial Depth patches.

If additional saw cuts are required to expand a patch, or to change a partial depth patch to a full depth patch, the Engineer will measure the additional saw cuts by the foot.

Payment for "Asphalt Pavement Patching", "PCCP Patching", "PCCP Edge Joint Patching", "PCCP Joint Patching (Full Depth)" and "PCCP Joint and Crack Patching" at the contract unit prices and "Extra Work Saw Cuts (Set Price)" at the contract unit set price is full compensation for the specified work.

SECTION 834

UNDERSEALING

834.1 DESCRIPTION

Fill existing voids under portland cement concrete pavement (PCCP) by drilling injection holes and pumping a cement/fly ash grout under the pavement slab as shown in the Contract Documents.

BID ITEMS	UNITS
Fly Ash (Undersealing)	Ton
Injection Holes	Each

834.2 MATERIALS

Provide materials that comply with the applicable requirements.

Water ..... **DIVISION 2400**
Portland Cement (Type I or II) ..... **DIVISION 2000**
Fly Ash ..... **DIVISION 2000**
Admixtures ..... **DIVISION 1400**

Mix the water, portland cement (not less than 25% by volume of solids) and fly ash (not less than 50% by volume of solids) into a cement/fly ash grout complying with the following requirements:

Fluidity (efflux time)	ASTM C939	9 to 15 seconds
7-Day Compressive Strength	ASTM C942	600 psi minimum

Use admixtures only with written approval from the Engineer.

834.3 CONSTRUCTION REQUIREMENTS

a. Weather and Seasonal Limitations. Do not underseal the PCCP if the pavement surface temperatures are below 35°F, if the subgrade or base course is frozen, or if the subgrade is saturated from recent rainfall, as evidenced by standing water on the pavement or in the joints or cracks.

Undersealing operations may start when the pavement surface temperature is above 35ºF, the ambient air temperature is 35ºF and rising and is expected to exceed 40º. Discontinue paving when the ambient air temperature falls below 40ºF. Do not place when it is raining or snowing.

b. Drilling Holes. Submit a hole pattern and pumping sequence to the Engineer for approval. Do not damage the existing reinforcing steel in the pavement. Before drilling the holes, determine the location of reinforcing steel.

Drill holes vertically and round a maximum of 2 inches in diameter to a depth sufficient to penetrate the base and into the subgrade material. Holes may be washed to create a small cavity, allowing initial spread of grout. Drill the holes in a manner preventing breakout at the bottom of the pavement. Do not put downward force on the drill that exceeds 200 lbf.

c. Pavement Undersealing. Use monitoring equipment capable of accurately measuring pavement slab movement of 0.001 inch. Do not allow vertical movements exceeding ⅛ inch in the slabs. Replace all slabs raised more than ½ inch. Unless the pavement is to be overlaid, grind (at the Contractors expense) all slabs raised more than ⅛ inch and less than ½ inch. Grade tolerances are applicable to both transverse and longitudinal grades.

Begin the grout injection as soon as practicable after mixing the grout. Do not use material held in the mixer or injection sump pump for more than 1 hour after mixing. Do not add water to the grout after the initial mixing.

Connect an expanding rubber packer, or other approved device, to the end of the grout plant discharge hose. Place the expanding rubber packer in the injection hole, being careful not to extend the discharge end of the rubber packer below the lower surface of the PCCP.

Inject the grout in the pre-approved pattern, and in the quantity required to fill voids under the PCCP.

Produce grout slurry to a 12 second flow cone time. Pump the grout into the holes using an injection pump with a pressure capability of 250 to 300 psi when pumping grout slurry mixed to a 12 second flow cone time.

Cease injection of grout when grout appears at any joint, crack or adjacent hole, or when monitoring devices indicate slab movement.

Cease injection at a hole when grout flow does not occur after 7 seconds of sustained 150 psi gauge pressure, and there is no indication of slab movement.

Prevent grout from being injected into any drainage facility or other open structure.

Prevent excessive loss of grout through cracks, joints, other drilled holes or back pressure. KDOT will not pay for wasted material.

Prior to grout drying on the drilled holes, fill the holes with a fast setting sand/cement mixture or other patching material approved by the Engineer

Replace slabs in which cracks emanate radially from the grout injection holes and in slabs where cracks develop between adjacent grout injection holes at no additional cost to KDOT. The Engineer may approve cross-stitching of the cracks if the cracking is minor.

d. Deflection Testing. KDOT may use the Falling Weight Deflectometer (FWD) at sample locations to determine the effectiveness of the undersealing operation. Voids detected under the slabs using this procedure will be filled a second time by the Contractor at no additional cost to KDOT.

834.4 MEASUREMENT AND PAYMENT

The Engineer will measure fly ash by the ton.

The Engineer will measure each injection holes. Monitoring for pavement lift is subsidiary to the injection holes.

"Fly Ash (Undersealing)" and "Injection Holes" will be paid for at the contract unit prices which is full compensation for the specified work. No adjustment in contract unit prices will be made regardless of the amount of underruns or overruns.

SECTION 835

RESEALING JOINTS AND SEALING CRACKS IN EXISTING PCCP AND HMA PAVEMENTS

835.1 DESCRIPTION

Concrete Pavement. Re-saw the longitudinal and transverse joints, and saw or rout the random cracks in the PCCP at the locations designated in the Contract Documents or as required by the Engineer. Clean and fill the sawed or routed joints and cracks with hot type joint sealing compound.

Asphalt Pavement and Concrete Pavement with Spalled Joints and Cracks. Prepare the existing cracks and joints at the locations designated in the Contract Documents or as required by the Engineer. Fill the cracks and joints with the specified materials.

Asphalt Shoulder Adjacent to Concrete Pavement. Clean the existing longitudinal joint between PCCP and asphalt shoulder at the locations designated in the Contract Documents or as required by the Engineer. Fill the joint with hot fiber-reinforced asphalt.

BID ITEMS	UNITS
Sealing PCCP Joints (Longitudinal)	Linear Foot
Sealing PCCP Joints (Transverse)	Linear Foot
Sealing PCCP Cracks (>⅛" <2")	Linear Foot
Sealing Spalled PCCP Joints & Cracks (>2" ≤3")	Linear Foot
Sealing Spalled PCCP Joints & Cracks, Type A or B (>2" ≤3")	Linear Foot
Sealing Asphalt Cracks (>⅛" ≤ ½")	Linear Foot
Sealing Asphalt Cracks (> ½" <2")	Linear Foot
Sealing Longitudinal Asphalt Shoulder Joint	Linear Foot

835.2 MATERIALS

a. Hot Type Joint Sealing Compound. When required, provide hot type joint sealing compound that complies with **DIVISION 1500**. When required, provide backer rod intended for use with the hot type joint sealing compound.

b. Fiber-Reinforced Asphalt. When required, provide a mixture of performance graded asphalt binder and polypropylene fibers. Provide a mixture that has not less than 8% fiber content by weight.

Provide PG 64-22 asphalt binder that complies with **DIVISION 1200**.

Provide polypropylene fibers suitable for the intended use that have a denier of 15 ± 3. The Engineer will accept the polypropylene fibers based on a Type D Certification according to **DIVISION 2600**, and visual inspection of the mixture.

c. Rapid-Set Concrete Patching Material. When required, provide rapid-set concrete patching material that complies with **DIVISION 1700**. Provide foam core backer board intended for use with the rapid-set concrete patching material.

835.3 CONSTRUCTION REQUIREMENTS.

a. Concrete Pavement, Joints and Cracks.

(1) Transverse Joints. Saw the existing transverse joints with a saw blade wide enough to clean both surfaces of the cut removing the existing sealant. Configure the transverse joints according to **FIGURE 835-1**.

FIGURE 835-1: PCCP SAWED TRANSVERSE JOINT DETAIL

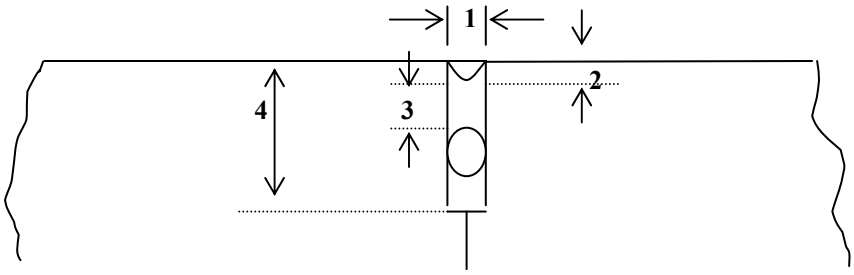

TABLE 835-1: PCCP SAWED JOINT DIMENSIONS*				
1 Joint Width	**2 Recess Below Surface**	**3 Sealant Thickness**	**Backer Rod Diameter**	**4 Total Joint Depth**
¼"	⅛" to ¼"	⅜"	⅜"	1"
⅜"	⅛" to ¼"	⅜"	½"	1⅛"
½"	⅛" to ¼"	⅜"	⅝"	1¼"
⅝"	⅛" to ¼"	½"	¾"	1½"
¾"	⅛" to ¼"	½"	⅞"	1⅝"
⅞"	⅛" to ¼"	½"	1"	1¾"
1"	⅛" to ¼"	½"	1⅛"	1⅞"
1½ "	⅛" to ¼"	¾"	1¾"	2⅜"
2"	⅛" to ¼"	1"	2½"	3⅝"

*All dimensions are nominal.

Clean, and fill the transverse joints according to **subsections 502.3g.(8)** and **(9)**.

(2) Longitudinal Joints. Saw the existing longitudinal joints with a saw blade ⅛" to ¼" wider than the joint, cleaning both surfaces of the cut, and, removing all existing sealant Configure the longitudinal joints to the width in column 1 in **TABLE 835-1**, with the depth equal to the original depth of the longitudinal joint. Clean and fill the longitudinal joints according to **subsections 502.3g.(8)** and **(9)**. Fill the longitudinal joint with hot type joint sealant compound to within ⅛ to ¼ inch of the surface. Do not use backer rods in the longitudinal joints.

(3) Random Cracks. Rout or saw random cracks greater than ⅛ inch wide with a blade ⅛ to ¼ inch wider than the crack and to a depth equal to the full width of the blade to produce a cut on each side of the crack for the full length of the crack. Clean, and fill the random cracks according to **subsections 502.3g.(8)** and **(9)**. Fill the random cracks (routed or sawed reservoir) with a hot type joint sealing compound to within ⅛ to ¼ inch of the surface. Do not use backer rods in the random cracks.

b. Concrete Pavement, Spalled Joints and Cracks. Clean the full depth of the spalled joints and cracks. Remove all foreign material that will prevent bonding of the sealant. Clean the joints and cracks by sandblasting. Remove loose material on the surface immediately adjacent to the joints and cracks.

Do not seal PCCP spalled joints or cracks greater than 3 inches wide.

If the PCCP joints and cracks are 3 inches or less wide and 1⅝ inches or less deep, fill the joints and cracks with hot fiber-reinforced asphalt. See **FIGURE 835-2**. Fill the joints and cracks to a level slightly recessed from the pavement surface.

FIGURE 835-2: SEALING PCCP, SPALLED JOINTS AND CRACKS
(>2" ≤ 3" wide, ≤1⅝" deep)

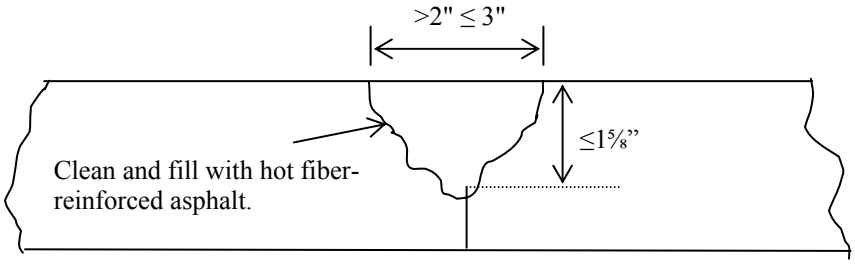

If the PCCP joints and cracks are 3 inches, or less, wide and greater than 1⅝ inches deep, use either the Type A option (**FIGURE 835-3**) or the Type B option (**FIGURE 835-4**) to fill the joints and cracks:

FIGURE 835-3: TYPE A, SEALING PCCP, SPALLED JOINTS AND CRACKS
(>2" ≤ 3" wide, >1⅝" deep)

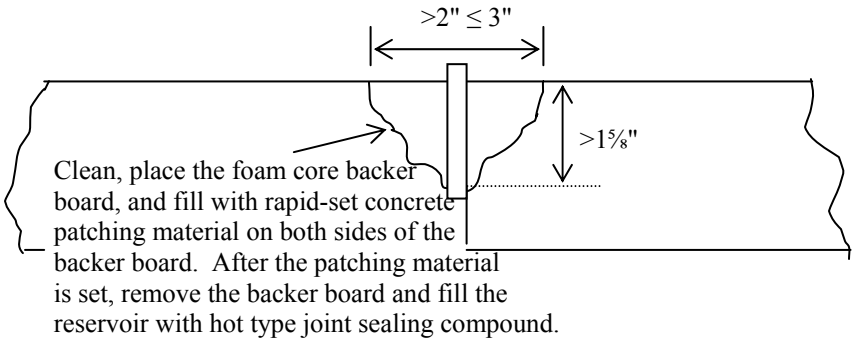

FIGURE 835-4: TYPE B, SEALING PCCP, SPALLED JOINTS AND CRACKS
(>2" ≤ 3" wide, >1⅝" deep)

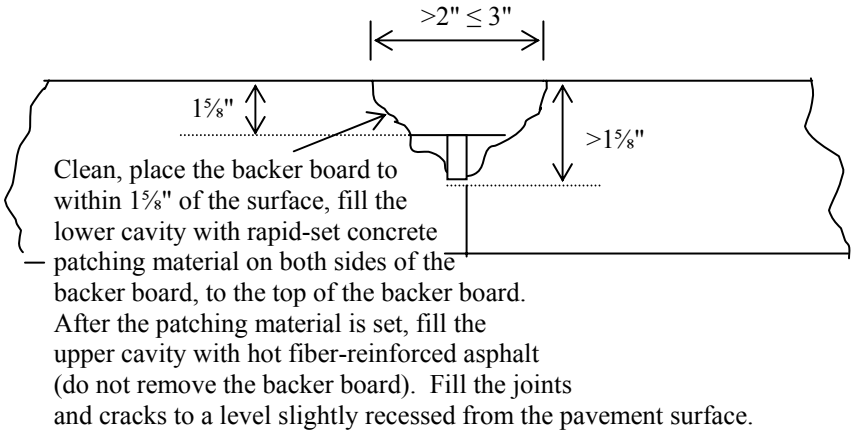

c. Asphalt Pavement Cracks. Seal cracks in asphalt pavement that are equal to or greater than ⅛ inch wide. Do not seal cracks less than ⅛ inch wide. Do not seal cracks wider than 2 inches. See **FIGURE 835-5**.

Rout all the cracks that are ⅛ to ½ inch wide following the existing crack. Route cracks ⅛ to ⅜ inch with a ⅝ inch router head, ⅜ to ½ inch with a ¾ inch router head and to a depth equal to or greater than the router head width. Cracks wider than ½ inch do not require routing.

Clean the full depth of the cracks. Remove all foreign material that will prevent bonding of the sealant. Remove loose material on the surface immediately adjacent to the joints and cracks. Clean and dry the cracks with a heat lance. Do not burn the pavement (indicated by smoke) with the heat lance.

Fill the routed cracks (⅛ to ½ inch) with hot type joint sealing compound. Fill un-routed cracks wider than ½ inch with hot fiber-reinforced asphalt. Fill all cracks to a level slightly recessed from the pavement surface.

FIGURE 835-5: SEALING ASPHALT PAVEMENT CRACKS) (>⅛"<2")

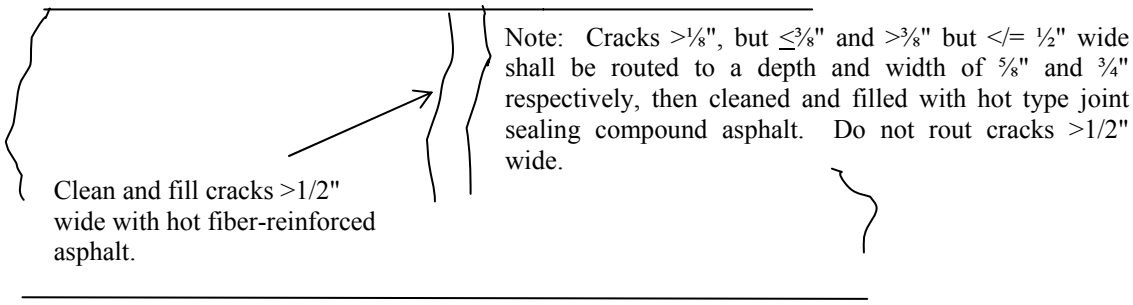

d. Asphalt Shoulder Adjacent to Concrete Pavement. Saw the concrete pavement to asphalt shoulder joint a minimum of ½ inch by 1inch or ⅛ inch greater than the width of the existing crack 1 inch deep Clean the joints as required in **subsection 502.3g.(8)**. Fill the joint with hot fiber-reinforced asphalt. Fill the joint with sealant to within ⅛ to ¼ inch of the surface. Do not use backer rods in the joints.

e. Manufacturer's Representative. Notify the sealant manufacturer's technical representative of the starting date of the initial installation. Demonstrate competence in applying sealant to the Engineer and the manufacturer's representative. Do not perform operations or procedures that would be detrimental to the sealing of joints and cracks.

This requirement will be waived for experienced Contractor's crews. Submit waiver request, along with a list of joint sealant crews successfully completed joint and crack sealing projects, to the Engineer for consideration.

f. Preparation of Asphalt for Crack Sealing. Heat the material to the temperature recommended by the manufacturer.

g. Weather Limitations. Do not place sealant when the ambient air temperature is below 40°F or above 85°F.

835.4 MEASUREMENT AND PAYMENT

The Engineer will measure sealing of joints and random cracks by the linear foot along the center of the joint or crack.

Payment for "Sealing PCCP Joints (Longitudinal)", "Sealing PCCP Joints (Transverse)", "Sealing PCCP Cracks (>⅛" <2")", "Sealing Spalled PCCP Joints & Cracks (>2" ≤3")", "Sealing Spalled PCCP Joints & Cracks, Type A or B (>2" ≤3")", "Sealing Asphalt Cracks (>⅛" ≤ ½")", "Sealing Asphalt Cracks (> ½" <2")" and "Sealing Longitudinal Asphalt Shoulder Joint" at the contract unit prices is full compensation for the specified work.

SECTION 836

SURFACING FOR SIDE ROADS AND ENTRANCES

836.1 DESCRIPTION

Place the designated surfacing material on side roads, entrances and other locations as shown in the Contract Documents.

BID ITEM	UNITS
Surfacing Material (*) *Type	Ton

836.2 MATERIALS

Provide aggregate for surfacing or resurfacing that complies with **DIVISION 1100**.

836.3 CONSTRUCTION REQUIREMENTS

Unless shown otherwise in the Contract Documents, grade the roadbed or subgrade to the lines and grades shown in the Contract Documents.

Apply surfacing material uniformly at the rate and locations shown in the Contract Documents.

Do not haul and place material if the Engineer determines that weather or road conditions are such that the hauling and placing operations will damage the roadbed or subgrade.

836.4 MEASUREMENT AND PAYMENT

The Engineer will measure surfacing material by the ton.

Payment for "Surfacing Material" at the contract unit price is full compensation for the specified work.

SECTION 837

PAVEMENT WIDENING, SHOULDERING AND PAVEMENT EDGE WEDGE FOR HMA OVERLAY PROJECTS

837.1 DESCRIPTION

Widen the existing pavement, construct shoulders or construct the transition from the pavement edge to the ditch as shown in the Contract Documents.

BID ITEMS	UNITS
Shoulders (Earth) (HMA Widening)	Station
Shoulders (Aggregate) (HMA Widening)	Station
Pavement Edge Wedge (Earth)	Station
Pavement Edge Wedge (Rock)	Ton
Aggregate for Shoulders (AS-1)	Ton
Common Excavation (Contractor-Furnished)	Cubic Yard
Water for Earthwork Compaction (Set Price)	M Gallon

837.2 MATERIALS

a. Material for Earth Shoulders and Pavement Edge Wedge (Earth). Use earthen material obtained from the locations shown in the Contract Documents. Do not use material containing roots, sod and other perishable and deleterious matter.

When required, provide Contractor-Furnished earthen material that complies with Contractor-Furnished Common Excavation, **SECTION 205**.

Earthen material will be accepted by the Engineer on the basis of visual inspection at the point of usage.

b. Material for Aggregate Shoulders and Pavement Edge Wedge (Aggregate). Use existing aggregate that is free of roots, sod and other perishable and deleterious matter.

If the project does not have existing aggregate for reuse, or if additional material is required, provide aggregate that complies with aggregate for shoulder construction (AS-1), **DIVISION 1100**.

The Engineer will accept this material on the basis of visual inspection at the point of usage.

c. Water for Earthwork Compaction. Provide water that complies with **DIVISION 2400**.

d. HMA Materials. Provide the designated HMA that complies with **DIVISION 600**.

837.3 CONSTRUCTION REQUIREMENTS

a. Excavation for HMA Pavement Widening. Excavate along the edge of the existing pavement to the depth and width shown in the Contract Documents. Compact the bottom of the trench according to Type B (MR-90) compaction, **SECTION 205**. If material unsuitable for proper compaction is encountered in the bottom of the trench, remove the unsuitable material and replace it with suitable earthen material. Dispose of the unsuitable material by scattering it at locations on the right-of-way as directed by the Engineer.

Before placing any HMA material in the trench, clean the trench of all loose material.

Provide for drainage of the trench, as necessary.

b. Placing the Asphalt Material Pavement Widening.

(1) Plant Mix HMA Construction. Clean the edge of the existing pavement. Paint or spray a thin coat of asphalt tack on the pavement edge. Place the HMA in the trench in 2 or more lifts. Place and compact the HMA by the method that produces the best results. Place the top lift of the HMA widening concurrently with the roadway surfacing. Compact the top lift of HMA to comply with the density requirements of HMA Overlay, **SECTION 602**.

(2) Cold Recycled Asphalt Construction. Place the cold recycled asphalt material in 1 lift. Place the material in the widening concurrently with the roadway material. Place and compact the cold recycled asphalt

material by the method that produces the best results. Compact the mixture to comply with the density requirements specified for the Cold Recycled Asphalt Construction, **DIVISION 600**.

c. Shouldering the Asphalt Pavement Widening. After the asphalt surface course is in place, construct the shoulders as shown in the Contract Documents. Do not damage the asphalt surfaces. Do not dump or mix material on the asphalt surfaces.

(1) Earth Shoulders. Use material obtained from the widening trench excavation, or Contractor-furnished material, if required, to construct the earthen shoulders.

Dispose of excess earthen material (obtained from the widening trench excavation), if any, at locations on the right-of way as directed by the Engineer.

Construct the earth shoulders according to **DIVISION 200**.

(2) Aggregate Shoulders. Use existing aggregate obtained from the project, or aggregate provided by the Contractor, when required, to construct the aggregate shoulders.

Stockpile any excess aggregate (obtained from the widening trench excavation at locations shown in the Contract Documents or locations on the project as directed by the Engineer.

Construct the aggregate shoulders according to **SECTION 305**, except the compaction shall comply with Type B (MR-90) compaction, **SECTION 205**.

d. Earthen and Aggregate Pavement Edge Wedge. After the HMA surface course is in place, construct edge wedges as shown in the Contract documents. Do not damage the HMA surfaces. Do not dump or mix material on the asphalt surfaces.

Use the type of material indicated in the Contract Documents to construct the wedges.

Place the material for the pavement edge wedge in a uniform layer. Compact the earthen wedge to comply with Type B (MR-90) Compaction, **SECTION 205**.

837.4 MEASUREMENT AND PAYMENT

The Engineer will measure shoulder for asphalt widenings on each side of the roadway by the station.

The excavation for the asphalt widenings is not measured for separate payment. The HMA quantities for the HMA widenings are included in the roadway surfacing quantities.

The Engineer will measure earth pavement edge wedge on each side of the roadway by the station.

The Engineer will measure the aggregate pavement edge wedge by the ton.

The Engineer will measure the aggregate for shoulders by the ton.

The Engineer will measure Contractor-furnished common excavation according to **SECTION 205**.

The Engineer will measure water for earthwork compaction according to **SECTION 205**.

Payment for "Shoulders (Earth) (HMA Widening)", "Shoulders (Aggregate) (HMA Widening)", "Pavement Edge Wedge (Earth)", "Pavement Edge Wedge (Rock)", "Aggregate for Shoulders (AS-1)" and "Common Excavation (Contractor-Furnished)" at the contract unit prices, and for "Water for Earthwork Compaction" at the contract unit set price is full compensation for the specified work.

SECTION 838

GRINDING REHAB CONCRETE PAVEMENT

838.1 DESCRIPTION

Grind the existing concrete pavement roadway surface to eliminate joint faulting, restore cross slope drainage, surface texture and riding characteristics.

BID ITEM	UNITS
Grinding Concrete Surface	Square Yard

838.2 MATERIALS - None specified.

838.3 CONSTRUCTION REQUIREMENTS

a. Control Profilograph. Using a California type profilograph, provide a control profilograph trace prior to performing any grinding. This control profilograph trace will be used to identify the required smoothness for the project.

b. Finish Requirements. Finish-grind the surface so that each segment has a final profile index a maximum of 35% of the control profilograph trace or 30 inches per mile whichever is greater. Correct all deviations in excess of 0.30 inch in a length of 25 feet within each section regardless of the profile index value.

After completing the pavement grinding, profile the pavement with the same California type profilograph used to establish control profilograph trace.

Determine a profile index in inches/mile for each section of corrected pavement surface. A pavement section is defined as a continuous area of finished pavement 0.1 mile in length and one 12 foot lane (nominal) in width. A partial section resulting from an interruption of the continuous pavement surface is subject to the same evaluation as a whole section.

Perform additional grinding to attain the required profile index provided the maximum depth of removal does not exceed ¾ inch.

The Engineer may perform profilograph testing on the surface for monitoring and comparison purposes. The Engineer may test the entire project length if determined the Contractor's test results are inaccurate. If the Engineer performs profilograph testing on the project and determines the Contractor's results are inaccurate, the Contractor will be charged $640.00 per mile per trace (minimum charge is $800.00).

Correct any deficiencies in the final surface due to improper operation or equipment.

838.4 MEASUREMENT AND PAYMENT

The Engineer will measure grinding of concrete pavement surface by the square yard.

Pay adjustment per 0.1 mile section per lane will be based on the average of the profile index of the 2 traces per 0.1 mile section per lane. Payment will be made according to **TABLE 838-1**.

TABLE 838-1: SCHEDULE FOR ADJUSTING PAYMENT FOR GRINDING EXISTING PAVEMENT

Average Profile Index Inch per mile per 0.1 mile section	Contract Price Adjustment Per 0.1 mile section per lane
10.0 or less	135.00
10.1 to 15.0	95.00
15.1 to 18.0	50.00
18.1 to 30.0	0.00

Payment for "Grinding Concrete Surface" at the contract unit price is full compensation for the specified work.

SECTION 839

RUBBLIZING PORTLAND CEMENT CONCRETE PAVEMENT

839.1 DESCRIPTION

Rubblize the existing PCCP, and compact the broken PCCP in place as shown in the Contract Documents.

BID ITEMS	UNITS
Crushed Stone for Backfill	Cubic Yard
Removal of Asphalt Material	Square Yard
Rubblized Concrete	Square Yard

839.2 MATERIALS

Provide crushed stone for backfill that complies with **DIVISION 1100**.

Provide HMA that complies with **DIVISION 600**.

839.3 CONSTRUCTION REQUIREMENTS

Before starting the rubblizing of the PCCP, remove and dispose of all asphalt overlays and patches. Replace the asphalt patches with crushed stone for backfill.

Use an impact hammer, resonant breaker or other equipment to break the pavement into the specified sizes without displacing the rubblized material into the base or subgrade. Use equipment capable of delivering enough energy to rubblize the PCCP. Where needed, use a breaker with a plate-type shoe designed to prevent penetration into the existing surface. Provide a watering system to suppress dust generated by the rubblizing operation. Provide a shield to prevent flying chips of pavement produced by the rubblizing operation.

Rubblize the PCCP full depth and full panel width to produce broken reinforcement, or the loss of concrete to steel bond. The majority of the rubblized PCCP shall be:

- 12 inches or smaller in size, with 80 to 100% less than 12 inches.
- 95% of the fragments greater than 6 inches.
- The maximum size is 15 inches.

Do not displace the concrete vertically (before rolling) more than ±1 inch.

Construct a test section to demonstrate compliance with the rubblizing specification. The Engineer will determine the location of the test section. Provide equipment to verify compliance with the sizing requirements. Vary the energy and striking patterns of the pavement breaker, and, when necessary, make repeated passes with the equipment until the specified rubblization is achieved.

Seat and uniformly compact the rubblized concrete. Use a steel wheel roller (10 tons) or a steel wheel vibratory roller to seat and compact the rubblized PCCP. Make a minimum of 2 one-way passes with the roller. Do not roll in a manner that will disperse the outside edge of the rubblized PCCP. Do not cause rutting, pumping or de-densification of the rubblized PCCP by over-compaction. If compaction is not achieved with the steel wheel roller, the Engineer may allow the use of a larger pneumatic roller.

The Engineer will determine, by visual inspection, if satisfactory rubblization is achieved.

Use the procedures established in the test section to rubblize, seat and compact the existing PCCP. If during the course of the work, the rubblizing requirements are not achieved, the Engineer may require another test section be constructed.

If soft spots are detected during the compaction operations, remove the unstable subgrade material and backfill with suitable material to the top of the subgrade. Fill from the subgrade to the top of the adjacent rubblized PCCP with crushed stone for backfill.

After the PCCP is rubblized and compacted, the Engineer may designate areas that require leveling. If the leveling course is placed directly on the rubblized and compacted PCCP, use either crushed stone for backfill or HMA base material. If HMA base material is used for leveling between succeeding lifts of the HMA base, complete the leveling before the final lift of the HMA base is placed. The material used for leveling (HMA or crushed stone for backfill) may be spread with a motor grader.

Overlay the rubblized and compacted PCCP with a HMA base course as soon as possible, within 24 hours of the rubblizing operations. If the rubblized PCCP is not covered with the HMA base within 24 hours, the Engineer will direct the Contractor to suspend all rubblizing operations until the previously rubblized PCCP is overlaid.

Do not allow traffic (other than necessary construction traffic) on the rubblized PCCP until a minimum of 4 inches of HMA base is placed on the rubblized PCCP.

839.4 MEASUREMENT AND PAYMENT

The Engineer will measure the crushed stone for backfill by the cubic yard.

The Engineer will measure the removal of asphalt material by the square yard.

The Engineer will measure rubblized PCCP by the square yard. The Engineer will measure the actual width of the existing PCCP, along the centerline of the roadway or ramp.

Payment for "Crushed Stone for Backfill", "Removal of Asphalt Material" and "Rubblized Concrete" at the contract unit prices is full compensation for the specified work.

Measurement and payment for HMA materials are as provided in the Contract Documents.

SECTION 840

TEMPORARY SURFACING

840.1 DESCRIPTION

Place and maintain temporary surfacing material to provide temporary access (ingress and egress) for residences and places of businesses. Remove and dispose of material when no longer needed.

BID ITEMS	UNITS
Temporary Surfacing Material (Aggregate) (Set Price)	Cubic Yard
Temporary Surfacing Material (HMA) (Set Price)	Ton

840.2 MATERIALS

Provide aggregate for temporary surfacing suitable for the intended purpose. The Engineer will accept the aggregate based on the performance of the material.

Provide HMA for temporary surfacing that is a commercial mix in general use in the local area. Provide a mixture of materials from recognized producers, mixed in a recognized type of hot mix plant. Provide emulsified asphalt for tack, when necessary. The Engineer will accept the HMA based on performance of the material.

840.3 CONSTRUCTION REQUIREMENTS

Place and spread the temporary surfacing material at the locations determined by the Engineer. Place and spread the temporary surfacing material to a smooth, reasonable cross-section. Shape the section to prevent ponding of water.

When placing HMA, use recognized equipment and techniques to weigh, haul, spread and compact the mixture. Complete the compaction operations while the temperature of the mixture is above 175°F. Do not place HMA on wet or frozen surfaces, or when the weather conditions will prevent proper handling and finishing of the mixture. The Engineer may waive the weather limitations when warranted.

Maintain the temporary surfacing to provide ingress and egress in all types of weather. Place additional material as necessary.

Remove and dispose of the material when no longer necessary.

840.4 MEASUREMENT AND PAYMENT

The Engineer will measure the aggregate temporary surfacing material by the cubic yard in the vehicle at the place of unloading.

The Engineer will measure the HMA temporary surfacing material by the ton. The Engineer will accept commercial scale tickets completed by the producer of the material.

Payment for "Temporary Surfacing Material (Aggregate) (Set Price)" and "Temporary Surfacing Material (HMA) (Set Price)" at the contract unit set prices is full compensation for the specified work. The contract unit set prices will govern regardless of the accepted quantity provided.

SECTION 841

LIGHT TYPE SURFACING

841.1 DESCRIPTION

Haul the material shown in the Contract Documents to the roadway and windrow the material for surfacing.

BID ITEM	UNITS
Light Type Surfacing (*) *Type: SA-* or SS-*	Cubic Yard

841.2 MATERIALS

Provide the specified type of aggregate that complies with **DIVISION 1100**.

841.3 CONSTRUCTION REQUIREMENTS

When shown in the Contract Documents, prepare the embankment or subgrade as detailed in the Contract Documents. When not shown in the Contract Documents, others will prepare the embankment or subgrade.

The rate of application for the light type surfacing is shown in the Contract Documents.

Do not haul material to the road when weather or road conditions are such that the hauling operations will damage the roadbed or subgrade.

Windrow the material hauled to the road along one shoulder of the road. Place the windrow on the roadway and parallel to the edge of the roadway, approximately 1 foot from the edge of the roadway or as directed by the Engineer. Construct a uniform windrow to a maximum width of 6 feet.

When not shown in the Contract Documents, others will spread the light type surfacing. When shown in the Contract Documents, spread the light type surfacing to the dimensions shown in the Contract Documents.

841.4 MEASUREMENT AND PAYMENT

The Engineer will measure the light type surfacing by the cubic yard.

Payment for "Light Type Surfacing" at the contract unit price is full compensation for the specified work.

SECTION 842

DRILLING AND GROUTING

842.1 DESCRIPTION

Drill holes and grout anchor bolts, dowel bars, tie bars and reinforcing steel into the existing concrete as shown in the Contract Documents.

BID ITEMS	UNITS
Drilling and Grouting	Each
Drilling and Grouting (Repair) (Set Price)	Each

842.2 MATERIALS

Provide materials that comply with the applicable requirements.

Reinforcing Steel ..... **DIVISION 1600**
Anchor Bolts ..... **DIVISION 1600**
Dowel Bars and Tie Bars ..... **DIVISION 1600**
Cementitious Grout ..... **DIVISION 1700**
Type IV Epoxy-Resin Bonding System for Concrete ..... **DIVISION 1700**

842.3 CONSTRUCTION REQUIREMENTS

a. Drilling Holes. Provide the Engineer with a copy of the grout (cementitious or Type IV epoxy-resin bonding system for concrete) manufacturer's instructions. Drill the holes into the existing concrete to the diameter recommended by the grout manufacturer. When drilling for new reinforcing steel, use a pacometer to avoid drilling into the existing reinforcing steel. In the absence of recommendations from the grout manufacturer, drill the holes approximately ¼ ± 1/16 inch larger than the diameter of the anchor bolts, dowel bars, tie bars and reinforcing steel without damaging adjacent concrete. Maintain proper vertical and horizontal alignment while drilling the holes.

b. Preparing Holes.

(1) General.

- Use compressed air to blow out the hole.
- Use a brush to clean the hole.
- Use compressed air to blow out and dry the hole.

(2) Vertical Holes. Do not leave ungrouted vertical holes overnight and exposed to freezing temperature.

(3) Horizontal Holes. Drill holes at an angle of 10º (minimum) from the horizontal plane as shown in **FIGURE 842-1**. When a conflict is encountered (such as reinforcement), a hole angle less than 10º may be drilled provided that a pre-qualified self contained grouting system is used.

FIGURE 842-1

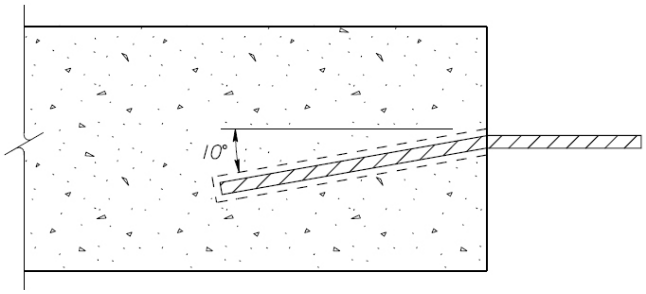

c. Grouting Holes. Mix, apply and cure the grout according to the manufacturer's instructions. Fill the dry, clean holes with an approved grout. Insert the bolt, bar or reinforcing steel into the freshly grouted hole so that no voids exist between the bolt, bar or reinforcing steel and the concrete. Clean overflow and center the bar or bolt in the hole.

d. Testing. When designated in the Contract Documents, proof load 20% of the installed anchorages to 90% of the design load according to the procedures in the Contract Documents.

842.4 MEASUREMENT AND PAYMENT

The Engineer will not measure the drilling and grouting of bars and bolts that are included in other items of work (such as the erection of structural steel and concrete pavement patching).

When shown as a bid item in the contract, the Engineer will measure each drilled and grouted hole.

Payment for "Drilling and Grouting" at the contract unit price, and "Drilling and Grouting (Repair) (Set Price) at the contract unit set price, is full compensation for the specified work.

SECTION 843

FLOWABLE FILL

843.1 DESCRIPTION

Backfill the designated structures or excavations with flowable fill.

BID ITEM	UNITS
Flowable Fill (*)	Cubic Yard
*Low Strength or High Strength	

843.2 MATERIALS

a. General. Provide materials that comply with the applicable requirements.

Fine Aggregate ..... **DIVISION 1100**
Cement and Fly Ash (approved for stabilization & cold recycle) ..... **DIVISION 2000**
Water ..... **DIVISION 2400**

The Engineer will approve the use of admixtures to achieve flowability and acceptable set time, based on performance.

b. Mix Design. Design a flowable fill mixture that possesses adequate flow characteristics to fill all voids, and complies with the compressive strength and unit weight requirements shown in **TABLE 843-1**.

TABLE 843-1: REQUIREMENTS FOR FLOWABLE FILL MIXTURE

	LOW-STRENGTH MIXTURE	HIGH-STRENGTH MIXTURE
3 Day Compressive Strength (minimum)	20 psi	-
7 Day Compressive Strength (minimum)	-	50 psi
28 Day Compressive Strength	100 psi (max)	1500 psi
Unit Weight (maximum)	120 pcf	-

Obtain approval from the District Materials Engineer for the job mixture. Supply 3 and 28 day compressive strength information for low-strength mixtures, or 7 and 28 day compressive strength information for high-strength mixtures, along with the mix design.

c. KDOT Assurance and Acceptance. The Engineer will make test cylinders for each 100 cubic yards of flowable fill placed, and whenever the mixture is changed. The cylinders will be made and tested according to **DIVISION 2500**.

- For the low-strength mixture, 3 cylinders will be made. The 1st cylinder will be tested on the 3rd day. The 2nd cylinder will be laboratory cured and tested on the 28th day. The 3rd cylinder will be laboratory cured and held in reserve to verify any questionable cylinder breaks.
- For the high-strength mixture, 3 cylinders will be made. The 1st cylinder will be tested on the 7th day. The 2nd cylinder will be laboratory cured and tested on the 28th day. The 3rd cylinder will be laboratory cured and held in reserve to verify any questionable cylinder breaks.
- The Engineer will test the unit weight a minimum of every 50 cubic yards of flowable fill placed.
- The Engineer will accept the flowable fill based on the results of the compressive strength and unit weight tests, and visual inspection of the mixture placed on the project.

843.3 CONSTRUCTION REQUIREMENTS

Place the flowable fill in the excavation so all voids around the structure or in the excavation are filled.
Place the flowable fill around structures in lifts preventing the buildup of excess hydrostatic pressure.

Observe the weather limitations specified in **DIVISION 400** when placing the flowable fill.

843.4 MEASUREMENT AND PAYMENT

The Engineer will measure flowable fill placed in the specified locations by the cubic yard.

Payment for "Flowable Fill" at the contract unit price is full compensation for the specified work.

SECTION 844

SLURRY GROUT

844.1 DESCRIPTION

Fill cavities of existing structures, mines or voids under pavements and slabs on grade with a slurry grout as shown in the Contract Documents.

BID ITEM	UNITS
Slurry Grout (*)	Cubic Yard

* Low Strength , High Strength or Underseal

844.2 MATERIALS

a. Materials. Provide materials that comply with the applicable requirements.

Fine Aggregate ..... **DIVISION 1100**
Cement and Fly Ash (approved for stabilization & cold recycle) ..... **DIVISION 2000**
Water ..... **DIVISION 2400**

The Engineer will approve the use of admixtures to achieve flowability and acceptable set time, based on performance. Provide foaming agents approved by the Engineer.

b. Approval of Mix Design. Design a slurry grout that complies with **TABLE 844-1**.

TABLE 844-1: REQUIREMENTS FOR SLURRY GROUT MIXTURE

	LOW-STRENGTH MIXTURE	HIGH-STRENGTH MIXTURE	UNDERSEALING MIXTURE
3 Day Compressive Strength (minimum)	20 psi	-	100 psi
7 Day Compressive Strength (minimum)	-	125 psi	600 psi
28 Day Compressive Strength	100 psi (max.)	200 psi (min.)	
Unit Weight (minimum)		92 lbs/cu. ft.	
Flow, seconds (ASTM C939)			10 - 16

Submit the slurry grout mix design and results of the required compressive strength testing (conducted by a testing laboratory) to the DME for approval. The DME will approve or reject the mix design within 2 weeks of the submittal.

c. KDOT Assurance and Acceptance. The Engineer will make a set of test cylinders for each 100 cubic yards of slurry grout placed on the project, and when the mix design or source of fly ash is changed. The Engineer will make and test the cylinders according to **DIVISION 2500**. The Engineer will make a set of 3 cylinders for each 100 cubic yards produced.

- For underseal mixture, test the 1st cylinder on the 3rd day
- For low strength, test the 1st cylinder on the 3rd day
- For high-strength mixture, test the 1st cylinder on the 7th day
- The Engineer will laboratory cure the remaining 2 cylinders.
- For underseal mixture, test the 2nd cylinder on the 7th day
- For low and high strength mixture, test the 2nd cylinder on the 28th day
- The Engineer will hold the 3rd cylinder in reserve to verify any questionable cylinder breaks.

The Engineer will test the unit weight a minimum of every 50 cubic yards of slurry grout placed on the project.

The Engineer will test the flow of the underseal slurry grout 2 times per day. The ratio of the water to cementitious material will be adjusted to comply with the requirements.

The Engineer will accept the slurry grout based on the results of the compressive strength, unit weight tests, and visual inspection of the mixture placed on the project.

844.3 CONSTRUCTION REQUIREMENTS

Pump the slurry grout into the structures to fill all the voids.

Bulkhead each end of the structure to be filled. Provide a minimum of 2 vent pipes to monitor the pumping. If necessary to fill the structure, pump additional grout through the vent pipes.

If filling voids under pavements and slabs on grade, place the slurry grout as shown on the Contract Documents.

Observe the weather limitations specified in **DIVISION 400** when placing the slurry grout.

844.4 MEASUREMENT AND PAYMENT

The Engineer will measure slurry grout by the cubic yard.

Payment for "Slurry Grout" at the contract unit price is full compensation for the specified work.

SECTION 845

CLEANING EXISTING STRUCTURES AND UNDERDRAINS

845.1 DESCRIPTION

Clean the designated existing structures and underdrains as shown in the Contract Documents.

BID ITEMS	UNITS
Cleaning Existing Structures	Lump Sum
Cleaning Existing Underdrains	Linear Foot

845.2 MATERIALS - None specified.

845.3 CONSTRUCTION REQUIREMENTS

a. Cleaning Existing Structures. Remove all foreign material from the structures designated in the Contract Documents. Use hand, mechanical, pressurized water or a combination of methods to expose all inside surfaces of the designated structures.

Do not move the existing structure out of position or damage the structure. Correct structures moved out of position, and repair or replace structures damaged because of the Contractor's operations.

Dispose of the material removed from the structure. The Engineer may allow placement of suitable material on the embankment slopes adjacent to the structures.

Grade the structure channel to provide drainage before cleaning the structure. Schedule the cleaning of the structures so that drainage is provided during the project construction operations. Maintain the cleaned structures until the project is accepted.

b. Cleaning Existing Underdrains. Clean the underdrains designated in the Contract Documents before completing any extensions or replacements of outlet sections. The Engineer will observe the cleaning operations.

Clean the underdrains using pressurized water. Use a cleaning unit consisting of a high-pressure pump (100 gallons per minute at 500 psi, minimum) connected to a hose (1 inch minimum) with a cleaning nozzle. Use a hose that is capable of traversing and cleaning up to 600 feet of underdrain. Use a cleaning nozzle similar to **FIGURE 845-1**.

FIGURE 845-1

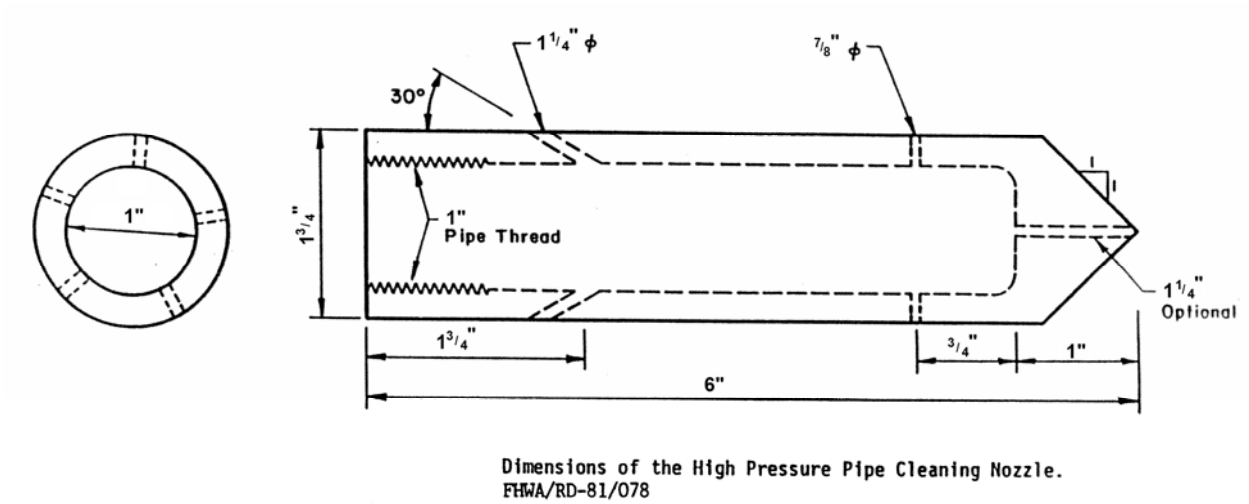

Do not damage the underdrains. Repair or replace underdrains damaged because of the Contractor's operations.

c. Video Inspection of Cleaned Underdrains. In the presence of the Engineer, perform a video inspection of all underdrains shown in the Contract Documents.

For the video inspection, provide a video camera complying with the following requirements:

- high resolution, high sensitivity, waterproof and color;
- capable of negotiating the various angle fittings used in the edge drain system;
- with sufficient lighting to provide a true color picture of the entire periphery of the diameter of the pipe; and
- with attachments that will maintain the camera's position in the center of the pipe.

Provide a portable control unit of the video camera complying with the following requirements:

- capable of adjusting the iris, focus, and light level intensity;
- have a color monitor (8 inch minimum) to track the camera's progress through the inspections;
- have 2 video input/output jacks for video recording, as well as tape playback verification through the built-in monitor; and
- have audio input to allow for dubbing of the video to incorporate comments as necessary.

Provide a video camera system complying with the following requirements:

- have sufficient cable/push rod to conduct inspections to a length of 500 feet, and a distance counter to monitor the length of the inspection;
- have a color video printer that will produce color prints of any observations of interest during the course of the inspection; and
- include a video recorder (minimum quality 4-head industrial grade VHS type) with audio dubbing, still frame and slow speed capabilities.

Provide an experienced video technician to operate the video camera system.

Using the same equipment noted above, re-clean any underdrains found to still contain soils and not working as intended.

Acceptance by the Engineer of the cleaned underdrain will be based on observations made during the video inspection.

845.4 MEASUREMENT AND PAYMENT

The Engineer will measure cleaning of the designated structures by the lump sum.

The Engineer will measure cleaning of the designated underdrains by the linear foot. The Engineer will measure the length of hose and nozzle inserted into the underdrain.

Payment for "Cleaning Existing Structures" and "Cleaning Existing Underdrains" at the contract unit prices is full compensation for the specified work.

SECTION 846

TRANSPORTING SALVAGEABLE MATERIAL

846.1 DESCRIPTION

Transport salvaged material to locations either on or off the project as shown in the Contract Documents.

BID ITEM	UNITS
Transporting Salvageable Material	*

* Unit of Measurement shown in the Contract Documents

846.2 MATERIALS - None specified.

846.3 CONSTRUCTION REQUIREMENTS

Transport the salvaged materials to the locations designated in the Contract Documents. Do not damage the salvaged material while loading, transporting and unloading at the storage area.

When the Contractor damages material designated as salvage, 60% of the current quoted price for new material delivered to the project will be charged to the Contractor. This amount will be deducted from payments due the Contractor.

846.4 MEASUREMENT AND PAYMENT

The Engineer will measure transportation of salvaged material by the units shown in the Contract Documents.

Payment for "Transporting Salvageable Material" at the contract unit price is full compensation for the specified work.

SECTION 847

MAILBOX ADJUSTMENTS

847.1 DESCRIPTION

Remove existing mailboxes and mailbox supports. When required by construction sequencing, relocate mailboxes at locations agreeable to owner and U.S. Postal Service. Reinstall acceptable mailboxes and mailbox supports.

BID ITEM	UNITS
Mailbox Installation (Set Price)	Each

847.2 MATERIALS

When necessary, provide commercially available mailbox supports constructed of a single 4 inch by 4 inch wooden post, a single 4 inch diameter wooden post or a single metal post. Use metal posts with a maximum strength of a 2 inch diameter standard strength steel pipe. Anti-twist devices (that extend a maximum of 10 inches below ground) are permitted on metal posts. Anchor plates are prohibited on metal posts.

Provide commercially available post-to-mailbox assemblies.

The Engineer will accept the mailbox supports and post-to-mailbox assemblies based on compliance with the specified requirements and visual inspection for condition at the point of usage.

847.3 CONSTRUCTION REQUIREMENTS

Remove the existing mailboxes and supports, and lay the mailboxes and supports on the owner's property.

The Engineer will inform the mailbox owners that only mailboxes and mailbox supports that comply with the requirements of the U.S. Postal Service will be reinstalled. If the owner's mailbox is unacceptable, it is the owner's responsibility to provide an acceptable mailbox for reinstallation. If the owner's mailbox support is unacceptable, the Contractor will provide an acceptable mailbox support for reinstallation. The Contractor will reinstall the mailbox owner's original mailbox if said mailbox complies with U.S. Post Office requirements. If the mailbox owner provides a lightweight newspaper delivery box, the Contractor will install the newspaper box below the mailbox (on the side of the mailbox support) when the mailbox is reinstalled.

If the mailbox owner chooses to reinstall their own mailbox, the Engineer will inform the owner of highway permit procedures, and advise the owner that the reinstallation must be approved by KDOT.

When the mailboxes are reinstalled, use these guidelines for installation:

- Locate the mailboxes on the right-hand side of the roadway in the direction of the delivery route. Mailboxes may be located on the left-hand side of the roadway on one-way streets.
- Embed the mailbox support post into the ground a maximum of 24 inches. Do not embed the post in concrete unless the mailbox support design is shown to be NCHRP 350 compliant when so installed.
- Set the bottom of the mailbox at an elevation established by the U.S. Postal Service, usually 3 ½ to 4.0 feet above the roadway surface.
- Set the roadway face of the mailbox at locations established by the U.S. Postal Service for the road conditions encountered.
    - if the shoulders are not surfaced and the shoulder cross-slope is 13% or flatter, offset the roadway face of the mailbox 8 feet from the edge of the traveled way;
    - if the shoulders are surfaced and 8 foot or wider, offset the roadway face of the mailbox the width of the all-weather shoulder;
    - if a mailbox turnout is provided, offset the roadway face of the mailbox the width of the mailbox turnout;
    - if the roadway is a curbed residential street, offset the roadway face of the mailbox 8 to 12 inches from the back of the curb;
    - if the roadway is a residential street without curbs or all-weather shoulders, offset the roadway face of the mailbox 8 to 12 inches from the edge of the traveled way;

- If the mailbox is located at a driveway entrance, place the mailbox on the far side of the driveway in the direction of the delivery route.
- If the mailbox is located at an intersecting road, place the mailbox a minimum of 100 feet beyond the center of the intersecting road in the direction of the delivery route (increase the distance to 200 feet if the average daily traffic on the intersecting road exceeds 400 vehicles per day).
- If there is a question as to the proper location of the mailbox, contact the U.S. Postal Service (local Post Office) for guidance.

For roads not on the state highway system, e.g, roads under city, county or township jurisdiction, the mailbox offset may be less than the distances outlined above and will be determined on a case-by-case basis in consultation with the owner of the facility. Items to be considered include, but are not limited to, roadway width, shoulder width, traffic volumes, presence of sight distance constraints, right of way impacts, etc.

847.4 MEASUREMENT AND PAYMENT

The Engineer will measure each mailbox installation.

The Engineer will not measure for separate payment temporary mailbox relocations required due to construction sequencing.

Payment for "Mailbox Installation (Set Price)" at the contract unit set price is full compensation for the specified work.