KANSAS DEPARTMENT OF TRANSPORTATION
SPECIAL PROVISION TO THE
STANDARD SPECIFICATIONS, 1990 EDITION

SECTION 706

DRILLED SHAFTS

Page 454, Section 706. Delete this Section and replace with this:

706.1 DESCRIPTION.

Construct drilled shafts by the cased or uncased method depending upon site conditions and Contract Document requirements.

BID ITEM	UNIT
Drilled Shaft (*) (**)	meter
Permanent Casing (Set Price)	meter
Sonic Test (Drilled Shaft) (Set Price)	each
Core Hole (Investigative)	meter

*Size
**Cased (If Contract Documents specify the cased method.)

706.2 MATERIALS.

a. Concrete. Unless otherwise shown in the Contract Documents, provide Grade 30 concrete that complies with the requirements of Special Provision 90M-156 (latest revision).

Concrete placed by the dry pour method must have a slump of 150 mm ±25 mm. Concrete placed by the wet pour cased method must have 10 percent additional cement and a slump of 200 mm ±25 mm.

b. Grout/Flowable Fill. Provide cementitious grout (mixed according to the manufacturers directions) that complies with the requirements of Special Provision 90M-206 (latest version) for backfilling the cross-hole sonic testing pipes and core holes.

Provide grout or flowable fill for backfilling the annular void space between the temporary and permanent casing that has 28 day strength of 7 MPa. Provide a grout consisting of mortar sand, FA-M (**Section 1102)** mixed with 2 bags of Type II Portland cement per 0.76 m^3, and a water-to-cement ratio of less than 1.

c. Reinforcing Steel. Provide steel bars for concrete reinforcement that comply with the requirements of **Section 1600**.

d. Casing. Provide casing of sufficient thickness to carry the working stresses and loads imposed on the casing during construction. At a minimum use 2.01 mm (14 gage) corrugated metal pipe (CMP) for the permanent casing regardless of analysis results. Perform shop welding by the automatic welding process to develop the casing strength. Perform field welds to develop adequate casing strength to fit the method of construction. Use certified welders for all welds. The Engineer will visually inspect the welds for condition.

If required, provide a permanent casing that is not be more than 25 mm out-of-round, and the deviation of a chord from end to end must not be greater than 50 mm.

The Engineer will accept the casing based on compliance with the specified requirements, and visual inspection for condition.

e. Pipe for Sonic Testing. Provide 50 mm diameter steel pipe that complies with the requirements of ASTM A 53, Standard Weight. Provide clean pipe (both internal and external surfaces) with watertight joints (the internal joints must be flush). Provide screw-on watertight shoes, couplers and caps for the pipes.

The Engineer will accept the pipe based on receipt and approval of a Type D certification that complies with the requirements of **Section 2600**.

706.3 CONSTRUCTION REQUIREMENTS.

a. General.

Drilled shafts lengths shown in the Contract Documents are an estimate from the top of formation elevations determined from borings. Depending upon actual formation elevations at each shaft, the Engineer may adjust the actual length of each drilled shaft as work progresses. If the Engineer changes the drilled shaft lengths, the Contractor will be advised (in writing) of the revised bottom of rock socket elevation.

At least 1 month before constructing the drilled shafts, submit an installation plan to the Engineer for review:

- Name and experience record of the drilled shaft superintendent in charge of drilled shaft operations for this project.
- Details of concrete placement, including proposed operational procedures for tremie and pumping methods and method of achieving a sealed tremie or pump.
- List of proposed equipment, such as cranes, drills, augers, bailing buckets, final cleaning equipment, desanding equipment, slurry pumps, core-sampling equipment, tremies or concrete pumps, and casing.

b. Investigative Core Hole.

At locations shown in the Contract Documents or requested by the Engineer, extract and maintain a core of the foundation material from 1200 mm above the top of the plan tip elevation (discard all material above this elevation) to 1800 mm below the plan tip elevation, or elevations shown in the Contract Documents. Maintain, protect, and label (elevation and location) these samples for review by the Geologist. Provide NX sized (5.4 cm) core samples organized in descending elevation and stored in standard core cardboard boxes for possible shipment. While drilling, prepare a continuous standard drilling/coring log. The logs will remain with the sample

for review. Survey the location of the core hole with the same construction tolerance as **706.3(d) Excavating the Drilled Shaft**. Perform this work, from the existing ground surface elevation, well in advance of the drilled shaft construction.

c. Construction Methods.

Prior to constructing drilled shafts, complete excavation for the entire pier.

Depending upon the type of casing(s) specified and site conditions, place concrete by either the dry pour or wet pour method:

- **Dry Pour Method.** Water inflow does not fill the shaft more than 100 mm in depth in a five minute period, **and**; the shaft can be dewatered so that no more than 50 mm of water is standing in the shaft when concrete placement starts. S**ubsection 706.3(g) Placing Drilled Shaft Concrete** outlines dry pour method requirements.
- **Wet Pour Method.** If site conditions do not satisfy dry pour method water criteria (described above), use wet pour method. S**ubsection 706.3(g) Placing Drilled Shaft Concrete** outlines wet pour method requirements.

(1) Uncased Method. Use this method at locations anticipated to be free of caving soil or excess water flow. If the actual conditions indicate the shaft is prone to caving soil or excess water, do not use the uncased method.

Excavate shaft without the use of added water or drilling fluid. Completely excavate the shaft in a continuous operation, unless encountering rock or obstructions.

Place concrete in an uncased shaft by the dry pour method only.

(2) Cased Method. Use this method at locations with caving soil or excess water flowing into the excavated shaft. Depending upon the site conditions, the cased method will require either a temporary casing, permanent casing, or both (depending on the type of permanent casing). If a CMP is the permanent casing, use an oversize temporary casing too. Permanent casings are watertight.

Advancing shaft excavation by stabilizing the hole with drilling fluid is acceptable; however, never allow drilling fluid to get into the rock socket.

Depending upon the type of casing(s) specified and site conditions, place concrete by either the dry pour or wet pour method:

- Using either a permanent and temporary casing together, or just a permanent casing (smooth thick walled, not CMP), concrete placement method depends on water inflow requirements.
- Using a temporary casing only, shaft must meet dry pour method requirements.

d. Excavating the Drilled Shafts.

Locate the top of the shaft within 50 mm of the location shown in the Contract Documents. Unless otherwise shown in the Contract Documents, bore all shafts plumb to within a tolerance of 8 mm per meter of length of shaft, not to exceed 150 mm. The bottom of the shaft must be nearly flat.

The cutting edges of excavation equipment must be normal to the vertical axis of the equipment within a tolerance of ± 30 mm per meter of diameter.

After removal of the overburden, complete the excavation below the top of rock as an uncased core (rock socket) of the diameter shown in the Contract Documents.

Do not excavate closely spaced drilled shafts (three drilled shaft diameters or less, center to center) until adjacent shafts are completed and cured:

- Allowed to set for 24 hours after completion of the concrete placement; and develop a compressive strength of 20 MPa.
- Or, provided the concrete used in the shaft has demonstrated satisfactory results from previous compressive strength tests, the Engineer may allow excavation to proceed when the shaft has cured 72 hours after completion of the concrete placement.

e. Placing Reinforcing Steel and Sonic Testing Pipes.

Place reinforcing steel as a unit for the full length of the shaft prior to placing any concrete by either pour method. Use concrete spacers or other approved non-corrosive spacing devices at sufficient intervals (near the bottom and at intervals not exceeding 3 meters up the shaft) to ensure concentric spacing for the entire cage length. If the shaft is deepened and additional reinforcing steel cage is required, make the splice at the bottom of the steel cage.

Place sonic testing pipes the full length of the shaft from the bottom of the rock socket to at least 300 mm above the top of the shaft concrete. Measure and record the length of the sonic testing pipes and elevation of any pipe joints. If multiple sections of pipe are required to reach the full length, the joints must be watertight and at the same elevation. After installation, fill pipes with potable water and cap them. For accurate test results, pipes must remain watertight until testing is complete.

f. Final Inspection and Access.

Just prior to placing the concrete, a minimum of 75 percent of the base of each shaft must have less than 12 mm of sediment at the time of placement of the concrete. The Engineer will determine the shaft cleanliness before concrete placement:

- By visual inspection,
- Underwater inspection using probes,
- Examine the quality of the air lift return water, or
- The material in the clean out bucket.

g. Placing Drilled Shaft Concrete.

For both the dry and wet pour method there are common requirements for concrete placed in a cased or uncased shaft:

- Place concrete in the shaft with a continuous operation, without construction joints.
- Do not vibrate concrete.
- During concrete placement, determine the top elevation of the fresh concrete and inform the Engineer.
- Use non-aluminum concrete pump discharge tubes and tremie tubes.
- When the concrete reaches the top of the shaft, continue placing concrete (over-pump) to expel any excess water, debris or unsound concrete.

(1) Dry Pour: Use a centering device to deposit concrete so the falling concrete won't come into contact with vertical reinforcing steel. Extend the centering device a minimum of

2400 mm into the shaft to control the fall. For a cased shaft concrete may free fall to the bottom. For an uncased shaft the maximum fall for concrete is 1.5 m.

(2) Wet Pour: Prior to starting concrete placement, allow the water level in the shaft to reach its static level. Place concrete with either a sealed (watertight) tremie tube or pump with extension tube and use a device (i.e. commercially available pig or flap gate) that prevents water from entering the tube while charging with concrete. When a commercially available pig is used, the pig must be at least 110% the diameter of the tube. Also, clearly label the outside of the tremie and pump tubes in 300 mm increments (starting at the bottom).

Lower the sealed tube into the shaft so the bottom of the tube is resting on the bottom of the rock socket, and fully charge the system (tube and hopper or pumping system). Once the system is fully charged, raise the tube from the bottom of the rock socket by one tube diameter and allow the concrete to seal the discharge end of the tube. Keep the tube at this elevation until a minimum of 2100 mm head of concrete is developed. During concrete placement, always maintain a minimum of 2100 mm head of concrete. Prior to raising the tube, determine the top elevation of the fresh concrete and inform the Engineer.

For wet pours, follow the steps listed in the previous paragraph, regardless of the Method (A, B or C) used to place concrete in the shaft:

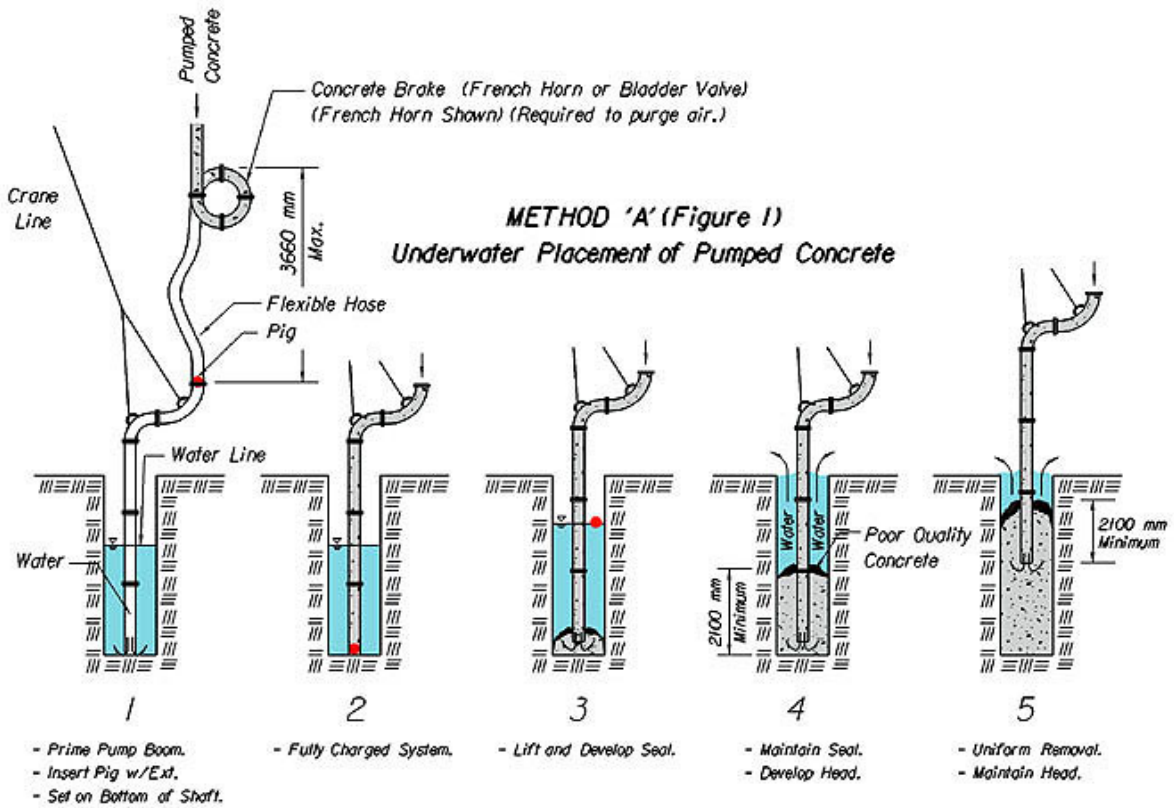

Method A (Figure 1). Uses a pump and extension tube, with a pig separating the ground water and concrete, to place concrete into the shaft. The pump boom is fitted with a concrete brake (e.g. bladder valve or French horn) at above the extension tube to purge the air from the pump line. Ensure the boom is fully charge with concrete (no air gaps) before installing the pig in the top of the extension tube.

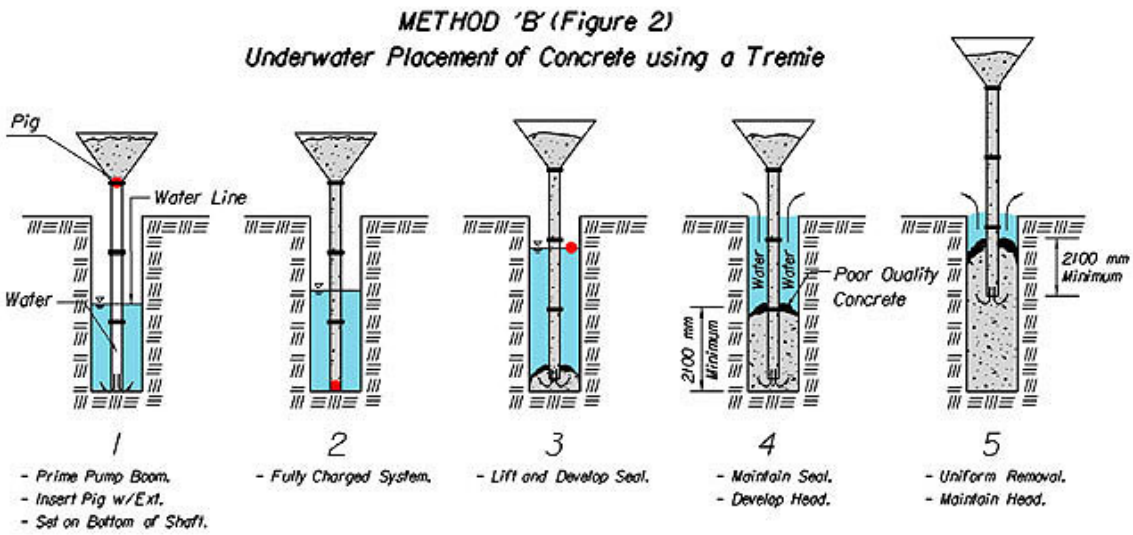

Method B (Figure 2). Uses a tremie tube, with a pig separating the ground water and concrete, to place concrete into the shaft. Once the tremie tube is resting on the bottom of the shaft, install the pig just below the hopper in the top of the tremie tube. Fully charge the tremie tube and hopper (forcing the pig to the bottom of the tremie tube), before raising the tremie tube by one tremie diameter and sealing the discharge end of the tremie tube with the fresh concrete.

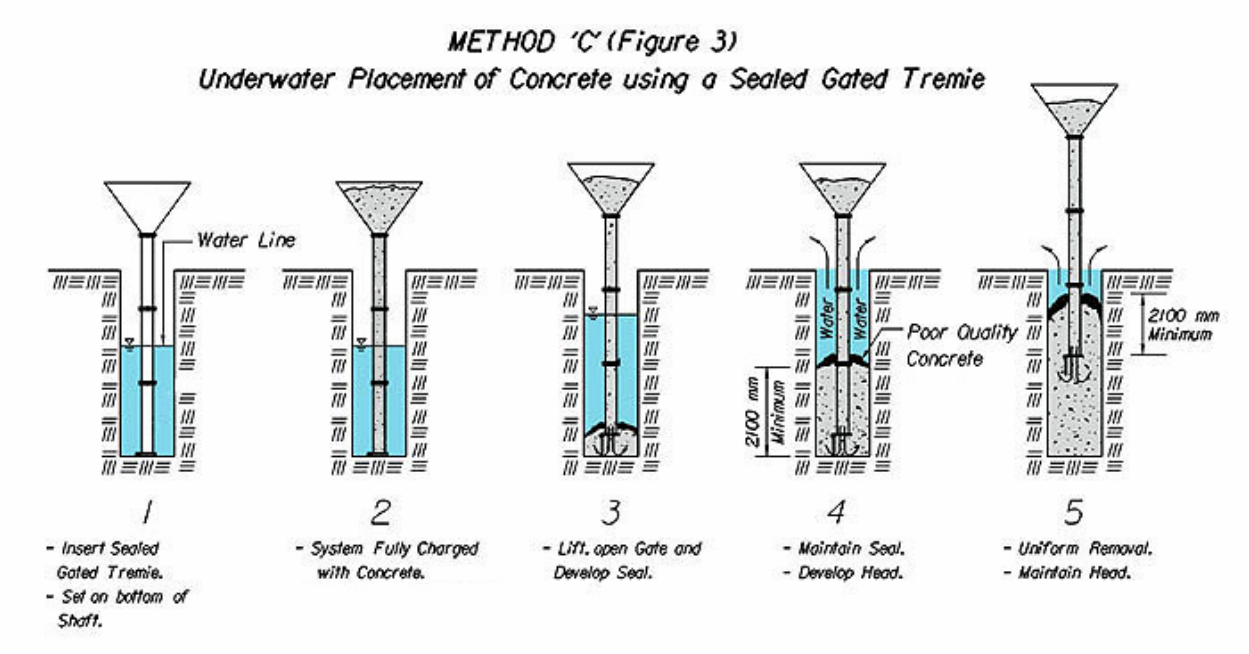

Method C (Figure 3). Uses a tremie tube, with a sealed gate separating ground water and concrete, to place concrete in the shaft. Fully charge the tremie tube and hopper, before raising the tremie tube by one tremie diameter and sealing the discharge end of the tremie tube with the fresh concrete.

In addition to normal concrete cylinder sampling requirements, for wet pours the Engineer will take one set of cylinders from the top of the shaft after completing over-pumping to verify a compressive strength of 20 MPa before proceeding with subsequent substructure (i.e. columns, abutments, etc.) construction.

Prior to constructing the portion of the substructure that attaches to the drilled shaft, thoroughly clean the top of the drilled shaft to facilitate the bond at the cold joint.

h. Raising Temporary Casing.

(1) Temporary Casing Only. When using a temporary casing only (dry pours only), remove temporary casing during concrete placement. Prior to raising the temporary casing, determine the top elevation of the fresh concrete and inform the Engineer to ensure the concrete surface is a minimum of 4 meters above the bottom of the casing. Start removing the temporary casing before the slump decreases below 125 mm as determined by testing, or as an alternate to slump control, start removal within 30 minutes of the concrete reaching the bottom of the temporary casing. Continue removing the temporary casing so that no concrete is inside the casing for more than one hour. If removal is not possible within these time limits, leave the casing in place.

(2) Both Permanent and Temporary Casing. Do not remove the temporary casing until adjacent shafts are completed and cured:

- Allowed to set for 24 hours after completion of the concrete placement; and develop a compressive strength of 20 MPa.

- Or, provided the concrete used in the shaft has demonstrated satisfactory results from previous compressive strength tests, the Engineer may allow excavation to proceed when the shaft has cured 72 hours after completion of the concrete placement.

However, immediately after completing concrete placement in the permanent casing, it is acceptable to raise and hold the temporary casing the embedment depth plus 150 mm.

Before completely raising the temporary casing, back fill the annular space between the two casings according to **subsection k. Backfill.**

i. Curing

Cure the exposed surfaces of the shafts according to the requirements of **Section 701**, except do not use liquid membrane curing.

Cure all cylinders in the field, alongside and under the same conditions as the concrete they represent.

j. Sonic Testing.

(1) General. Conduct the sonic testing between 2 and 21 days after the drilled shaft is completed. The Engineer has the option to require additional testing at the locations he designates.

Secure the services of an independent, experienced testing organization to take the cross-hole sonic logging measurements. Submit to the Engineer for approval, the testing organization's record of experience, a written description of the testing procedures, operation manuals for the testing equipment, and samples of previous test results indicating both sound and defective concrete.

(2) Sonic Logging Equipment. Provide sonic logging equipment capable of identifying any faults, honey combing, or poor concrete at KDOT specified operating settings:

- A time base that will provide the “zero signal” and "first arrival" are 2 to 3 divisions apart on the horizontal axis.
- Select an amplitude signal that fills $^2/_3$ to $^3/_4$ of the screen vertically.
- Set the gain on 2.0.

Provide test results on thermal or graphical print outs with the vertical scale representing the vertical position along shaft, and the horizontal scale representing the propagation time.

(3) Sonic Logging Test Procedure. Conduct the sonic logging test procedure between all possible combinations of pipes (i.e. 4 pipes have 6 different combinations, 5 pipes have 10 different combinations, 6 pipes have 15 different combinations, 7 pipes have 21 different combinations, 8 pipes have 28 different combinations, etc.) If the sonic testing detects faults, the Engineer may require retesting with the probes in the same or different horizontal plane(s).

Immediately prior to testing, ensure the pipes are free from blockages and filled with water. Determine the elevation of the top of the drilled shaft and the top of each pipe, plumb each pipe to determine the depth and provide the information to the Engineer.

Configure sonic logging to settings in **subsection 706.3 j (2) Sonic Logging Equipment**.

Use a winch to simultaneously raise the probes from the bottom of the pipes at a rate less than 300 mm per second. Before switching on the analyzer, take all slack out of the cables.

(4) Record of Testing. After completing sonic testing, provide the Engineer the test results (recorded on thermal or graphical printouts) with the profiles referenced to the top of the pipe elevation. Inform the Engineer on site of any faults, honeycombing or poor concrete detected by a

fainting of the signals and a sudden lengthening of the propagation time. Diagram (horizontal and vertical cross sections) any defects found within the shaft to identify the location, width and thickness of the defect. Within one week of conducting the sonic test, provide the Engineer a report (signed by a Professional Engineer) of the results and recommendations for acceptance or correction of each drilled shaft.

If the sonic logging inspection indicates defective concrete, drill cores (NX size or larger) at locations directed by the Engineer. Provide the Engineer core samples labeled with their location and relative elevation. If the concrete is defective, submit in writing to the Engineer a proposal to repair the drilled shaft. The Engineer must approve the proposal before repairs commence. Subsequent to completing repairs, fill core holes by pressure grouting with materials described in **subsection 706.2(b)**. Use a pipe extending to the bottom of the hole to fill it from the bottom to the top.

After completing sonic testing and final acceptance of the drilled shaft, pressure grout the sonic testing pipes, with grout described in **subsection 706.2 (b) Grout**. Use a pipe extending to the bottom of the hole to fill the sonic logging pipes.

k. Backfill.

If a temporary casing and a permanent casing are used, backfill the annular space (between casings) with the material specified in the Contract Documents:

- Granular material fine enough to fill the entire volume; or
- Grout or flowable fill described in **subsection 706.2 (b) Grout/Flowable Fill.**

If the plans don't specify a material, use the granular material.

Before completely raising the temporary casing, fill the annular space with grout/flowable fill to the top of the casing:

- If the annular space contains water, use a pump with an extension pipe or tremie (extending to the bottom of the annular space) to fill the annular space.
- If the annular space is dry, the grout/flowable fill can free fall to the bottom of the shaft.

After extracting the temporary casing fill the rest of the annular space with granular material. The Engineer will accept the granular material based on a visual inspection.

706.4 MEASUREMENT AND PAYMENT.

The Engineer will measure accepted drilled shafts by the meter (measured to the nearest 0.01 m and paid to the nearest 0.1 m) from the bottom of the rock socket to the top of the completed drilled shaft.

The Engineer will measure the accepted permanent casing by the meter (measured to the nearest 0.01 m and paid to the nearest 0.1 m), if a permanent casing is necessary, but not specified in the Contract Documents. Otherwise the Engineer won't measure the permanent casing:

- If the Contract Documents required a permanent casing.
- If the Contractor does not meet the time limits for removing the casing in 706.3 h (1).
- If the Contractor uses the casing for their convenience.
- If the casing is a temporary casing.

The Engineer will measure each completed and accepted sonic test, at Contract locations and added locations, per shaft (i.e. sonic logging between all possible combinations of pipes represents a single sonic test). If the sonic testing indicates defective concrete in shaft, and the cores reveal defective concrete, the Engineer will not measure the sonic test for payment.

The Engineer will measure the investigative core hole by the meter (to the nearest 0.1 m, from the existing ground surface to 1800 mm below the drilled shaft tip elevation).

Payment for "Drilled Shafts," "Permanent Casing," and "Core Hole (Investigative)"at the Contract unit prices, and for "Sonic Test" at the Contract set price is full compensation for the specified work.

If the Engineer lengthens the drilled shaft during construction, the Engineer will measure and pay for additional reinforcing steel according to the requirements of **Section 703**.

If the sonic testing indicates defective concrete in the shaft, and the Engineer requests cores from the shaft, the Engineer will not measure the cores for payment if the cores reveal defective concrete. If the cores reveal sound concrete, the Engineer will pay for the cores as "Extra Work" according to the provisions of **Division 100**.

12-26-03 C&M (MLH)